S.S. TUTSHI GUIDE MANUAL

Heritage Branch

Yukon Territorial Government

Table of Contents

SECTION I

I. S.S. Tutshi Guide Manual 1
- Introduction 1
- Activity in the Yukon River Valley 2
- Klondike Gold Rush 3
- Arrival at Bennett 4
- Sternwheelers on the Southern Lakes 6

II. Tourist Trade and the S. S. Tutshi 9
- Construction of the S. S. Tutshi 13
- Steam Machinery 17
- Miscellaneous Fittings 24
- Alterations to the S. S. Tutshi 26
- The Tutshi's Retirement 29
- Restoration Program by Y.T.G. 30

- Ship's Crew and Responsibilities 33
  - Master Pilot 33
  - Pilot 35
  - Engineers 36
  - Mates 37
  - Chief Steward 38
  - Purser 39
  - Deck Crew 40
    - Firemen 40
    - Deckhands 40
    - Cabin Crew 41
    - Galley Crew 42
  - Passengers 43

III. Communities Served by the Tutshi 44
- Atlin 44
- Ben-My-Chree 45
- Bennett 47
- Carcross 48
- Conrad 51
- Engineer Mine 51
- Taku City 52

SECTION II

- Roles and Responsibilities 54
- Philosophy of Interpretation 55
- Objective 55
- Role of the Interpreter 55
- Attitude 56
- Responsibilities 58

Fire Protection & Fire Evacuation Procedures 60
In Case of Fire or Emergency 61
Guided Tours 61
Scheduling Tours 63
Opening and Closing the Site 64
Touring 65
Tour Critique 65
The Tour 66

Appendix A: Suggested Reading List 76

Appendix B: S. S. Tutshi Specifications 77

Appendix C: Definitions of Nautical Terminology 78

Appendix D: Critique of Interpretive Tour 85

S.S. TUTSHI GUIDE MANUAL

Introduction

The S.S. Tutshi, one of the last three remaining sternwheelers in the Yukon, is a significant historic site. The Tutshi represents a portion of Yukon history which saw the rise of tourism in the Yukon. The beauty and pristine nature of this part of Canada has been and continues to be an attraction to people from around the world. Almost as soon as there was transportation into the Yukon, there have been tourists coming to the north. The demand in the southern lakes was such that a larger and more elaborate sternwheeler was needed to meet the expectations of the tourists coming to the Carcross area.

The **Tutshi** was referred to as the "queen of the BYN Co. fleet". She was elaborately decorated and provided many of the luxuries associated with cruise boat excursions. This manual has been prepared for the use of interpretive staff who will have the responsibility to guide the public through the **Tutshi** and tell them her story.

Yukon Territorial Government

Heritage Branch

Heritage Branch is a section of the Department of Tourism which concerns itself with the conservation and protection of significant historic sites in the Yukon such as the **S.S. Tutshi**, Fort Selkirk and Herschel Island. All of these at one time played an important part in the history of the Yukon. The heritage of the Yukon is a valuable resource to the people of the Yukon in that it helps us understand how the Yukon developed into what it is today.

The **S.S. Tutshi** is recognized as being of importance to life in the Yukon for the part it played in the development of the lake area south of Carcross. It was part of the tourism and mining industry, both of which played a vital role in the economy of this area.

Activity in the Yukon River Valley

The history of sternwheelers in the Yukon is deeply routed in the economic development of the Yukon and northern British Columbia. Transportation is one of the predominant obstacles that has to be overcome in order to settle an area. The abundance of rivers and lakes in the Yukon suggested that water transportation would be the most practical means of moving around the territory. The rivers in the Yukon are characteristically shallow and narrow in some parts. This combination of characteristics creates obstacles such as sandbars which continually change with fast flowing water. The sternwheeler design was most suited to this kind of river and so became the foundation for the transportation network which was to last nearly ninety years. The first sternwheeler to appear on the waters of the Yukon River was the Wilder, launched in 1866. The Wilder was extremely modest in its function. It was unable to tow anything, could carry very little cargo and any breeze made it difficult to steer - hardly a promising attempt at providing the answer to the transportation needs that were to follow. In 1869 regular river service between St. Michael on Norton Sound and the area of the Klondike River became a reality, picking up passengers and supplies from the ocean going carriers. These sternwheelers were far better designed for the purpose intended. They were approximately 75 feet long, 14 to 20 feet in width with a draft of 3 to 4 feet. They were equipped with powerful wood-burning engines, could carry ten tons and were able to push a barge when necessary. By 1871

sternwheelers were travelling upriver as far as Fort Selkirk taking care of the supply requirements of trappers, miners and prospectors in the area. Not until the discovery of gold in 1898 did sternwheelers begin to use the upper section of the Yukon River beyond Fort Selkirk to as far as Bennett at the headwaters. It was a combination of fur trading, trapping and prospecting that led to the gradual increase in the non-native population in the Yukon and consequently the need for improved transportation to manage the increased demand.

Klondike Gold Rush

The discovery of gold in the Klondike River drainage area in 1896 set in motion one of the largest mass movements of people in North American history. In a matter of days after the first vessel arrived in Seattle carrying large quantities of gold from the Klondike, thousands upon thousands of men and women began organizing and departing for the goldfields. There were numerous routes to choose from to make the long journey to Dawson City, the flourishing gold rush town at the confluence of the Klondike and Yukon rivers. Those who could afford the fare could travel by ship along the coast of Alaska to St. Michael on Norton Sound. From St. Michael, where the shallow Yukon River meets the Pacific Ocean, a smaller, shallow draught vessel was required to navigate the 1200 miles to the goldfields. Those stampeders with less money to spend could board a ship bound for Dyea and Skagway in the Lynn Canal. From either of these ports, the stampeders had to make their way over a range of mountains

to the headwaters of the Yukon River which would take them to Dawson City. If money was not to be had for travelling by ship, overland routes evolved which could be used to transport one's equipment and supplies by carrying them on one's back or by using horses and mules. Routes left from Vancouver, Wrangell, Alaska and Edmonton. The shortest route might take many weeks and the longest, a year and a half. The majority of stampeders travelled via the Lynn Canal, through the Chilkoot or White Pass to the Yukon River headwaters at Bennett. There the stampeders had the dubious task of constructing boats and scows which would carry them and their years supply of food and equipment through the lakes and down the Yukon River to Dawson.

Arrival at Bennett

The vast majority of the stampeders coming into the Yukon during the winter of 1897 and 1898 chose the Chilkoot and White passes as the quickest and most cost effective routes to the gold fields. These two trails converged at the south end of Bennett Lake where the largest tent city in the world sprang up. By the early spring of 1898 Bennett City had grown to a population of 10,000 men and women all bound for Dawson City. The passes had presented these 'cheechakos' with a formidable challenge of transporting 1,150 pounds of supplies through the mountains. Those that were personally carrying all their gear, rather than taking advantage of the aerial tramways, often made more than 40 trips up and down the infamous "Golden Stairs" prior to reaching the Chilkoot Pass summit. All of this was

done during the harshest part of winter. Bennett Lake, known to be part of the headwaters of the Yukon River which led to Dawson City, provided a means of getting to the gold fields that was quicker and easier than hauling supplies overland. The stampeders still had 560 miles to travel once they left Bennett before reaching the Klondike. Using this water route presented them with the task of constructing a vessel of some description. Lindeman and Bennett cities had become bustling communities providing many of the services required for a growing population. Several sawmills were operating in the area converting standing timbers into usable lumber. Within the first week after the ice went out of Lake Bennett, 7,100 boats of various descriptions left Bennett City carrying 28,000 stampeders and thirty million pounds of provisions.

Even as the goldrush was beginning to take shape, the White Pass & Yukon Route company was embarking on a project to build a narrow-gauge rail line through the White Pass to the headwaters of the Yukon River. For some time before the Gold Rush, there had been some interest by a British company to build a railway into the interior of the Yukon. Knowledge of the resources in the Yukon was minimal but there was definite interest in gaining access to them. The White Pass was selected as the most desirable choice over which to build as it was not as steep or high as the Chilkoot Pass. Rail was the obvious choice to connect the ocean waters and the inland water routes.

Sternwheelers on the Southern Lakes

Access to Dawson and the gold fields was decidedly easier from the southern lakes and upper portion of the Yukon River than the longer route via St. Michael. With the promise of a new rail line operating from Skagway to the headwaters at Bennett, commercial boat building activity increased in the southern lakes. This was the beginning of a fifty-seven year history of steamer activity in the series of lakes in the Carcross area. The need for well organized water transportation was apparent. Bennett Lake and Klondyke Navigation Company (BL & KN) was established to build large, commercial boats for the trip to Dawson City. The BL & KN facilities were located at the mouth of the Wheaton River on the west shore of Bennett Lake. The facilities included a sawmill, blacksmith, brick kiln, workshops and housing for the work crew. The BL & KN company built the A. J. Goddard, S. S. Bailey and the Bellingham. The first steam powered vessel to make the trip from Lake Bennett to Dawson City, a total of 560 miles, was the Bellingham. She had been towed through the inside passage of Alaska to Skagway, dismantled, packed over the White Pass to Bennett and reassembled. The Bellingham left June 6, 1898, carrying 18 passengers and 40 sacks of mail, and arrived from Bennett in Dawson City on June 13. Shortly thereafter, eight more steam boats arrived in Dawson City. Over the next 3 years BL & KN added the Ora, Nora and Flora to their fleet at Bennett City. The Bailey travelled from Bennett to Canyon City, through the Whitehorse Rapids and was put into service on the Whitehorse to

Dawson City section of the Yukon River. Along with the Bailey, BL & KN Co. operated the Flora and Nora on the upper portion of the Yukon River which connected with their sister ship, the Ora at Whitehorse. Most of the ships built on the upper lakes were shortly put into service from Whitehorse to Dawson City. The trip from Dawson to Bennett cost $174 including board but not bedding and the trip downriver to Dawson from Bennett was $75.

By July 1900 White Pass & Yukon Route had pushed the rail line through to Whitehorse in order to bypass the White Horse Rapids to where the Yukon River became easily navigable to Dawson City. The rail line made Whitehorse the new transportation hub for supplying the upper Yukon River and the Klondike. Once the rail line was at Whitehorse the steamers were no longer needed to operate from Bennett to Canyon City.

The discovery of gold in 1898 at Discovery on Pine Creek, a creek feeding into Atlin Lake along the east shore, had introduced another demand for transportation services. Very quickly a sternwheeler service was being offered between Bennett and Atlin. The BL & KN Co. used the Flora for the trip from Bennett to Taku. Taku is located on a narrow 2 1/4 mile wide strip of land at the east end of Taku Arm which separates Tagish Lake and Atlin Lake. At first the sternwheelers would merely drop off the miners at Taku and they would have to find their own way across the lake to the mining area. The crossing was usually accomplished, like the men at Bennett, by building their own boats. In May of 1899 the sternwheeler Scotia, was built on Atlin Lake at Scotia Bay to carry passengers and supplies from

Scotia Bay to Atlin.

Atlin was developing into another gold mining boom town. From 1898 to 1910 over ten thousand miners attempted to find their fortune in the gold fields south of Atlin. To facilitate the movement of goods from one sternwheeler to another across the narrow strip of land between Tagish and Atlin lakes, a group of men from Victoria received a charter from the British Columbia legislature to construct a tramway or railway. The rail line runs nearly parallel to the Atlin River but it consists of a 50 foot drop in the 2 1/4 miles. Certainly not navigable by any of the sternwheelers. Hence the need for the rail line to portage between the two lakes. The grade of the slope was 7% - a grade so steep that when the Duchess was in use passengers frequently had to unload and help push the locomotive up the grade. The company known as the Atlin Short Line Railway and Navigation Company was to run a rail line from Taku Arm near Atlin River to Scotia Bay on the west shore of Atlin Lake. On June 6, 1899 the tramway was opened. This narrow-gauge tramway linked wharves that had been constructed at Taku and Scotia Bay by the same company.

A competing company, the John Irving Navigation Company, offered a scheduled steamer and railway service from Bennett to Atlin, from June to October 1899. The John Irving Navigation Company temporarily acquired control of the tramway which gave them effective monopoly of the transportation service between Bennett and Atlin. They owned the wharves as well and insisted that the competing steamers land their freight and passengers on

log booms.

A year later White Pass & Yukon Route (WP & YR) purchased the assets, steamers, wharves and tramway of the Irving Navigation Company. With this purchase WP & YR achieved control of the transportation facilities of the Bennett-Atlin area. For the next 35 years WP & YR controlled all of Atlin's transportation services and facilities. By mid-July 1900 the first train crossed from Taku to Atlin Lake on one of Canada's shortest rail line, only 2 1/4 miles long. A one way fare was two dollars which was considered excessive by the local people having to use the tramway.

In 1901 WP & YR formed the British Yukon Navigation Company, its river division, to operate its growing fleet of steamers. White Pass & Yukon Route was now on its way to developing a strong Yukon wide transportation monopoly that was to last up until the Second World War.

Tourist Trade and the Tutshi

From the time prospectors first explored the Atlin Lake area, the scenery has been described with superlatives. At the south end of the lake can be seen the magnificent Llewellyn Glacier. The Indian people in the area called it "Sid", meaning "Big Ice". Due to its beauty and pristine quality, Atlin became known as "Little Switzerland of the North". The lake was full of speckled trout and greyling and wild game was plentiful. Atlin Lake was developing the reputation as a sportsman's paradise. The area became very popular for those who could

afford to travel. Consequently the British Yukon Navigation Company (BYN) began promoting a cruise package from Carcross to Atlin using the steamers Gleaner and Scotia.

The Gleaner was built at Bennett by John Irving Co. in 1899 and operated from Bennett to Canyon City. The Gleaner was 115 feet long with a 24 1/2 foot beam and had accommodation for 24 passengers. The B.Y.N. Co. purchased the Gleaner in 1901 and used it to carry freight and passengers from Carcross to Taku connecting with the Scotia on Atlin Lake. That year the Gleaner carried 1150 passengers and 1025 tons of freight. The Scotia was 80 feet long, had 80 horse-power engines, was capable of carrying 70 tons of freight and had twelve berths for passenger accommodation. The Scotia was replaced in 1916 by a larger vessel, the Tarahne. The Tarahne was the first gas powered, twin screw boat in the BYN fleet. It could carry 198 passengers. The Tarahne was especially designed for sightseeing having a glass-enclosed observation room on her upper deck. Prior to the First World War the tourist traffic into the Yukon steadily grew. The number of tourists interested in visiting the Atlin area steadily increased until it became necessary to arrange for greater accommodation. In 1916 the BYN Co. built the Atlin Inn, a large three storey structure. The construction took only 5 weeks. The tourist season was approximately 100 days long.

To handle this increased interest in visiting the Atlin area the BYN Co, needed a large vessel with more refined accommodation and services. And so the **Tutshi** was built.

Tutshi is an anglicized variation of the Tlingit T'ooch' Aayi, which means Black Lake. The Indian tradition had a fascination with large, deep lakes. Those caught in the terrible squalls that frequent Tutshi Lake spoke of a monster inhabiting these waters. Teamed up with the Tarahne, the two vessels supplied the Atlin area with large numbers of tourists. After leaving Carcross, the **Tutshi** would travel south through Nares Lake to Windy Arm, crossing east to Tagish Lake. The eastern limit of Tagish Lake is Taku Inlet where the passengers would transfer by the narrow gauge train to the Tarahne at Scotia Bay on Atlin Lake. The trip across the lake to the Inn is only 6 miles.

The excursion offered to the tourist by WP & YR was quite spectacular through the towering mountain peaks which surround the lakes southeast of Carcross. By name these lakes are: Bennett Lake, Windy Arm, Tagish Lake, Taku Arm, Taku Inlet and Atlin Lake. The tourists would disembark an ocean going vessel in Skagway, board the train which travelled through the world renowned White Pass to Carcross. At Carcross the **Tutshi** was standing by to take passengers for an excursion on the lakes. The first segment of the trip was through Nares Lake, passing the entrance to Windy Arm. From there it was a short time until the **Tutshi** entered Tagish Lake, a lake known for its treacherous waters. Due to the considerable length of Tagish Lake, the waves have a good distance to reach dangerous proportions. The **Tutshi** would proceed south through the lake to the east shore where Taku Inlet intercepts Tagish Lake. Taku Inlet is approximately 15 miles long and at the head of the inlet was the

transfer point of Taku. Here the narrow gauge rail line carried passengers and freight across the 2 1/4 miles of land that separated Atlin Lake from Taku Inlet.

One of the services provided by BYN Co. was the delivery of mail to people living in the southern lakes area. Otto Partridge had been interested in gold mining and built a retreat which he called Ben-My-Chree, manx (a Gaelic dialect) for Girl of My Heart. Ben-My-Chree is located at the south end of West Taku Arm. The Partridges first came to Ben-My-Chree in 1910 and had been able, over a number of years, to produce an English-type flower garden in the wilderness. While the Gleaner was making its usual mail stop at Ben-My-Chree, the tourists would insist on getting off and quickly visit with the Partridges and admire their fabulous gardens. It became obvious that Ben-My-Chree held much attraction for tourists. In 1917, the BYN Co. ran two special excursions to Ben-My-Chree in the newly launched **Tutshi**. Each summer thereafter, BYN Co. added more excursions to meet the growing demand so that by 1925 the superintendent of BYN Co. commented that the trip to West Taku Arm and Ben-My-Chree was the most popular destination stop in the area. The round trip fare to Ben-My-Chree was $15.00. The following year the **Tutshi** alternated daily trips to Ben-My-Chree and to Taku. Due to the gradual slope of the beach at Ben-My-Chree the Tutshi could not float close enough to the shore to let passengers disembark. A wooden walkway, stretching more than a quarter mile from shore to where the **Tutshi** could remain afloat, was constructed for the convenience of the

passengers.

During the 1920's and 1930's the **Tutshi** was carrying an average of 5,262 passengers a year. In 1929 9,094 passengers were carried on 93 round trips. In 1936 White Pass had to close the Atlin Inn. According to information gathered from individuals who once worked on the **Tutshi** there were several reasons why the Atlin Inn was closed. White Pass was not obeying the laws about sewage disposal. The sewage from the Inn had been emptying into the lake. As well an airline out of Juneau had started flying tourists into Atlin. This would impact the passenger monopoly that BYN had enjoyed. BYN could no longer afford to operate the Tarahne on Atlin Lake. Ben-My-Chree thereafter became the primary destination for the daily excursions of the **Tutshi**. The **Tutshi** would leave from Carcross at noon, travel on Tagish Lake, to the south end of West Taku Arm and land at Ben-My-Chree, arriving around seven in the evening. The passengers would disembark for two hours at which time they would once again board the **Tutshi**. If the passengers were particularly energetic that evening, the **Tutshi** would tie up at Engineer Mine for a few hours while a dance was held. Early in the morning, usually around two, the **Tutshi** would start heading back to Carcross, arriving around 9 a.m. where the passengers would board the train for Skagway.

Construction of the S.S. Tutshi

The **S. S. Tutshi**, affectionately referred to as "the queen of the British Yukon Navigation Company fleet", was launched on

June 15, 1917. She was the largest steamer to be used on these lakes. She was 167 feet long with a beam of 35 feet and had a registered tonnage of 746.31 tons. The construction method of the six foot deep hull is called Carvel which means that the planks in the hull meet flush as opposed to overlapping. The hull consists of ribs attached to longitudinal trusses to form internal keelsons. In areas where considerable weight was positioned, such as under the boiler, transverse trusses were needed. The hull planking is high quality Douglas fir and some of the ribs are oak. To provide the shallowest draught possible the depth of the hull was reduced forcing many of the functions routinely contained in the hull to be placed elsewhere. The boiler, engines and associated pumps were all mounted in the freight deck. The depth of this hull design was inadequate to give the necessary rigidity over the length of the whole ship. Without rigidity in the hull structure, it would tend to sag at the ends. This is known as hogging. The fact that heavy loads were situated at both ends, the engines and the boiler, exaggerated the problem. To prevent this from happening adjustable hog chains were installed. Hog chains are iron rods ranging from one to two inches in diameter which were fastened to hull timbers in the bow and stern and then placed over posts and struts mounted on the keelsons. Turnbuckles were used to lengthen and shorten the hog chains to adjust the sagging and hogging according to load requirements. The configuration of these posts and struts was to have the kingposts along the centreline of the hull with the queenposts on each side. The

queenposts were angled to provide the needed compression to support both stern and bow. As with all sternwheelers the **Tutshi** has a square stern. To provide sufficient turning power with a stern mounted paddle wheel, four balance rudders were mounted between the wheel and the transom. The blades of these rudders extended aft under the paddle wheel and forward under the rake of the stern. This design allowed for the largest surface area as possible which gave the greatest turning power. Eddies created by the stern interfered with the effectiveness of the balance rudders. These rudders were in fact more effective when the vessel was backing because the paddle wheel pushed the water against the rudder. To assist with the turning, monkey rudders were mounted behind the paddle wheel to increase turning ability. With this configuration of rudders the sternwheelers did not need a large area in which to manoeuvre.

Continuing with the struggle to attain a design which would permit a shallow draught, the superstructure was constructed as light as possible. The stick construction of the bulkheads used 1 1/4" x 3" cedar studs covered with 1/2" cedar v-joint on one side. Structural components such as stanchions and deck construction were made as light as possible and probably are less than adequate for the job they are to do. To make water proof, the decks were covered with canvas, coated with linseed oil and painted.

The Tutshi used a locomotive boiler which originally burned only wood but later was converted to burn oil as well. The boiler was rated at a maximum pressure of 165-170 lbs. per

square inch. Two Reese-Poppett valve engines, with a six foot stroke, cranked the paddle wheel. The paddle wheel is 16 feet 8 inches wide with a diameter of 21 feet 9 inches. The **Tutshi** was able to reach a speed of 15-18 knots/hour. A Depue steering gear was used to control the course of the vessel. To supply electricity an 8 kilowatt electric generator was used. Before additions, the 40 staterooms had hot and cold running water and accommodate 80 first class passengers. Each deck of the vessel is equipped with toilet rooms for both men and women.

The **Tutshi** has three decks. On the freight deck were found the boiler, two engines, lighting plant, pumps for supplying drinking water and water for the boiler, the cook galley, pastry room and cabins for crew members. Cargo was carried on this deck as this allowed for easy loading and unloading. Here too, was where the fire wood was loaded for use in the boiler. The second deck is the Saloon Deck. Near the bow of the boat is the Observation Room, a luxuriously decorated sitting room where the passengers could sit, relax and have a magnificent view of the surrounding scenery. On the starboard side of this room was the Purser's Office. Directly behind the Observation Room was situated the extensive and equally elaborate saloon or dining room. On the forward bulkhead was an electric fireplace with a mantel piece and over it a medieval scene inlaid in wood. The wood work of the dining room was of a white background with brown and gold moldings and panels of veneered green heart stained oak. Located on the port side of the dining room was the pantry connected to the galley below by a dumbwaiter. The

dining room could seat 60 at each sitting. Two sittings were generally required for each meal to accommodate all the passengers. Beyond the dining room was a neatly furnished smoking room. Along the walkway on both sides of the Saloon deck were the doors to the staterooms. Each room had one set of bunk beds. On the Boat deck were located the life boats for emergencies, many more staterooms and the cabins for the officers of the steamer. On the Texas deck was located the wheel house.

Steam Machinery

From the time that the **Tutshi** was placed on her ways for the last time in 1955 until 1971 when the Yukon Territorial Government acquired her, the **Tutshi** had not been protected against vandalism. As a result, every piece of equipment has been partially disassembled and valuable pieces, such as brass fittings (some 150), removed. This poses a problem for thorough interpretation of the operation of the steam system used in the **Tutshi**. However, it is important to be able to explain the operation of the steam system to Visitors to the **Tutshi**.

It is a measure of the versatility of steam as a medium for conveying power that all the mechanical, electrical and heating systems on board were activated from this common source, which was produced as simply as by the burning of wood or oil.

Although simple in principle, the steam systems are somewhat complex in detail, and certainly required skill and vigilance to operate safely and efficiently.

The boiler produced steam which was then piped to the main engines, the auxiliaries (electric generators, various pumps and other equipment) and the heating systems (radiators and hot water heating). In the engines and auxiliaries the steam expanded in the cylinders causing the pistons to produce reciprocating movement. This motion was translated, in the case of the main engines into the rotary motion of the paddle wheel crank shaft. The spent or exhaust steam was then condensed back to water. Fig. 1 is a schematic diagram illustrating the flow of steam to the various components.

The locomotive type boiler consists of a cylindrical vessel, which contained the water and steam, into the end of which is built the combustion chamber and firebox. The flue gases generated by the fire rise into the combustion chamber and pass horizontally through a large number of fire tubes where the majority of heat transfer to the surrounding water occurs. Heat transfer also takes place through the top and sides of the combustion chamber and all sides of the firebox which are surrounded by water (the water legs). The water side of the boiler is under pressure (approx. 160 psi) when in operation. For safety reasons, all boilers are equipped with safety valves and subject to annual inspections, at which time the condition of all components are examined for weakness due to corrosion, overheating, or fatigue. On the boiler exterior at the stokehold end is the door through which solid fuel is fed into the firebox or where the oil burner nozzles are lit and monitored.

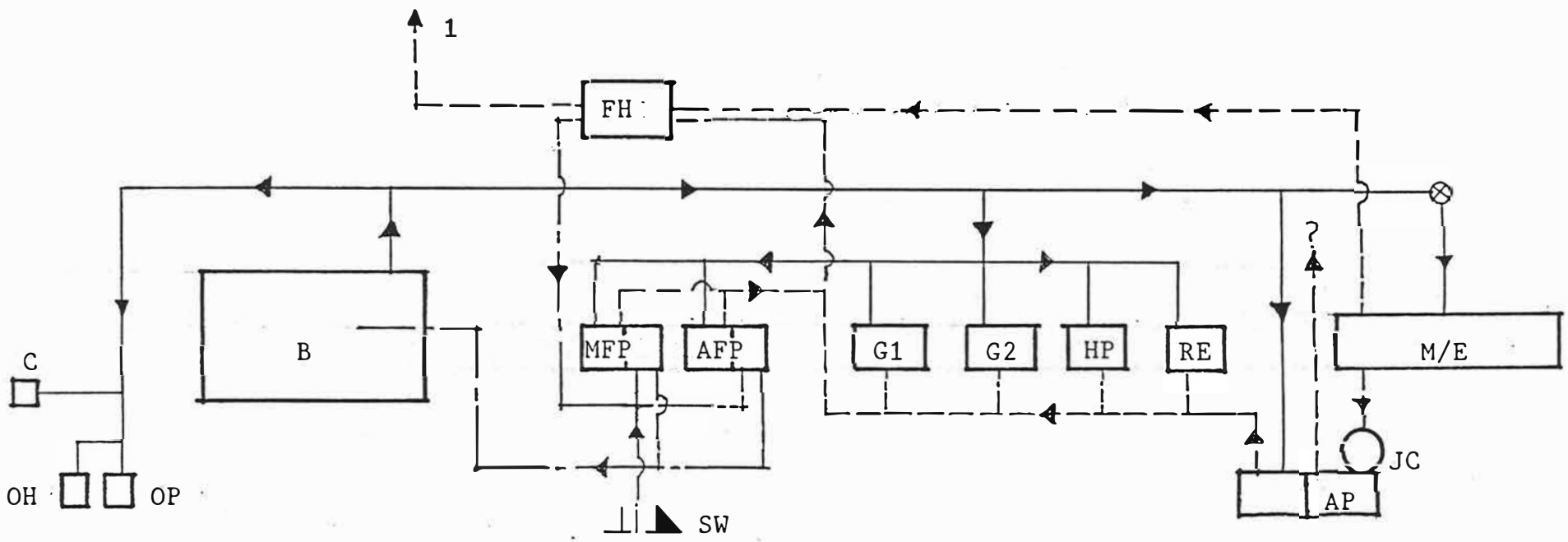

FIGURE 1

SCHEMATIC FLOW DIAGRAM

KEY

——— Steam Supply
– – – – Steam Exhaust
—·—·— Feed Water

1. Original steam exhaust to funnel

B	Boiler
M/E	Main engines
JC	Jet condenser
AP	Air pump
FH	Feed heater
MFP	Main feed pump
AFP	Auxiliary feed pump
G1	Generator 1
G2	Generator 2
HP	Hydraulic pump
RE	Reversing engine
OH	Oil heater
OP	Oil pump
C	Capstan
SW	Sea well

S. S. TUTSHI
CARCROSS, YUKON

Above the fire door is a glass gauge which indicates the all-important water level in the boiler. Near this location are three test cocks which serve to double check on the reading of the glass gauge. At the opposite end of the boiler adjacent to the end of the fire tubes is the smoke box which collects the flue gases being drawn through the tubes and directs these gases up the stack. At the base of the smoke box is a cleanout for collecting ash. Large doors in the smoke box allow access for cleaning and repairing of the boiler tubes.

The steam rises into a steam separator mounted on top of the boiler from which it is piped through the main steam pipe to the Engine Room. Mounted on top of the boiler are the air cock, the whistle pipe and the essential safety valves. Located on each side of the drum are the main and auxiliary feed pipes which provide the primary and back-up water supply. In addition there are several fittings on the boiler to facilitate inspection, cleaning and maintenance. On the upper side is a manhole which provides access to the boiler tubes. There are smaller handholes in the waterlegs to facilitate inspection and removal of sludge. At the bottom are the blow-down cocks used to drain the boiler for repairs or cleaning. The considerable weight of the boiler and its contents are supported on feet which in turn rest on transverse wood trusses with steel tie rods which bear on the keelsons.

Steam leaving the boiler passes first through the main steam stop valve and then through the main steam pipe to the engine room, through the intermediate stop valve and through a

sensitive manoeuvring valve over the engineer's station. The steam flow at this point divides to the two sets of cylinders on opposite sides of the ship. There is a tee off the main steam line which connects to the auxiliary steam line which feeds the auxiliary equipment. Similarly there are tees for the heating systems, steam syphons, windlass and fire pump.

The principles of operation of reciprocating steam engines are illustrated in Figure 2. Through the slide valves live steam is introduced alternately to one side and then the other of a piston which slides within the cylinder. At the same time that fresh steam is let in one side, the expanded or exhaust steam from the last stroke is allowed to leave on the other. In this way the expansion of the steam drives the piston back and forth. On the **Tutshi** the exhaust steam from the high pressure (HP) cylinder is delivered to the low pressure (LP) cylinder where it is admitted through a similar valve and expanded again, deriving more power from the steam. The pistons of the HP and LP cylinders are linked in tandem to a common piston rod whose motion is conveyed to the crosshead and which then via the connecting rod or pitman arm drives the main crank of the paddle wheel shaft. On the opposite side of the boat an identical set of cylinders delivers power to a crank at that end of the paddle wheel shaft. This crank is at 90 degrees to the one opposite, hence if one crank should be at deadcentre, the other will be in a position to turn the shaft either way. This arrangement is known as a tandem compound engine. The motion of the slide

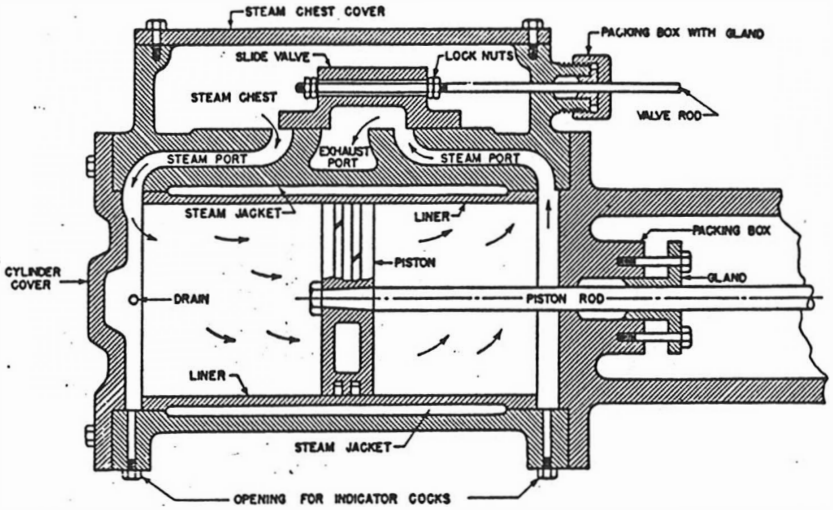

Steam Cylinder: Section

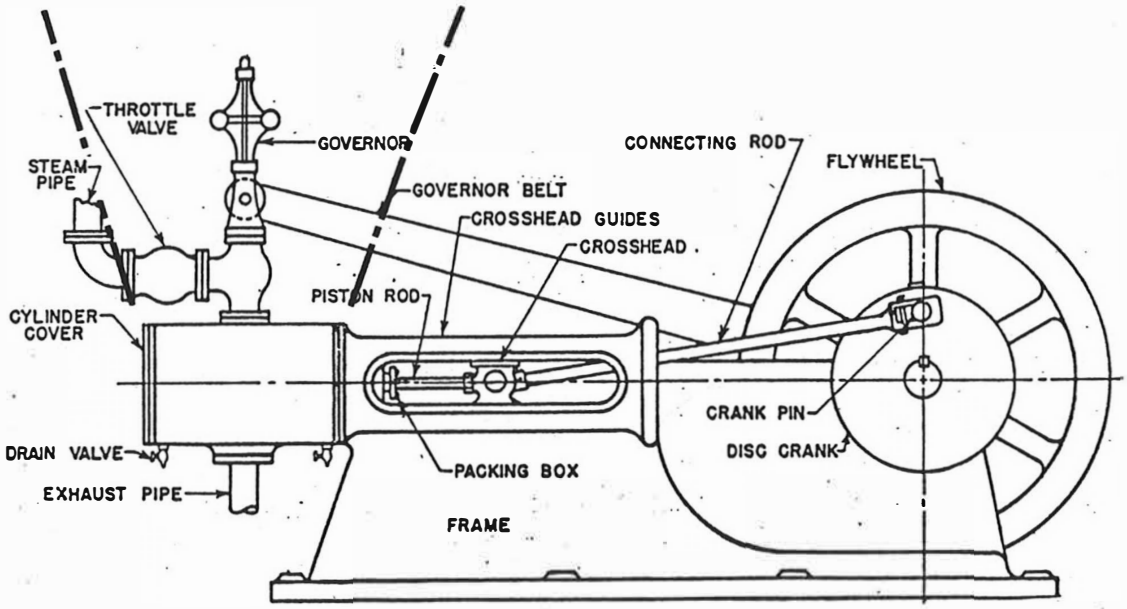

Fig. 2—Side elevation of simple steam engine.

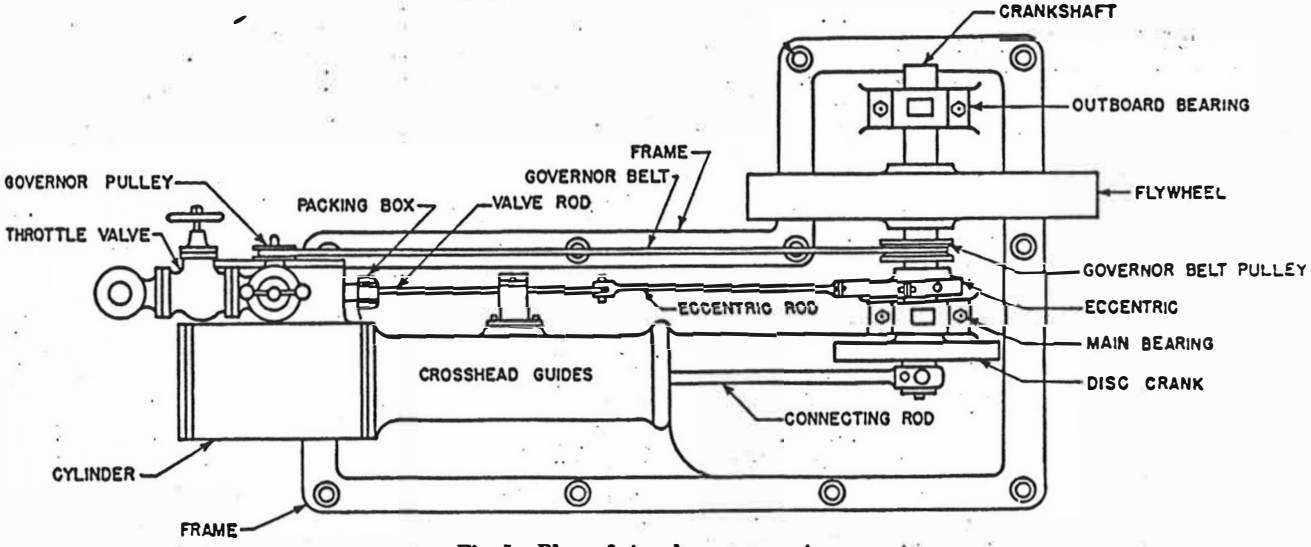

Fig. 1—Plan of simple steam engine.

FIGURE 2 SIMPLE STEAM ENGINE

valves is in a direct and constant relationship to the motion of the piston and is controlled by the valve rod which is moved by an eccentric wheel fixed on the crank shaft (see fig. 2). By altering the angular relationship between the eccentric and the crank it is possible to make the engine run either in forward or reverse. The **Tutshi** is typical of most sternwheelers in having two eccentrics for each set of slide valves, one for forward and one for reverse. A mechanism called a Stephenson link brings one or the other eccentric into play (see fig. 3). By throwing the reversing lever the engineer can put engines either forward or astern. The movement of the Stephenson link is assisted by a small steam powered reversing engine. Full power is available for reverse, if required. In order to take advantage of the expansive property of steam, the steam supply to the cylinder is cut off part way through each power stroke. Because of limitations on how early in the stroke a simple slide valve can cut off the steam, the engines are fitted with independent cut-off valves mounted atop the HP valve chest which are controlled by a separate eccentric on the crank shaft. The exact point of a cut off would be adjusted by the engineer once underway to obtain maximum economy of operation.

As first installed, the exhaust steam from the main engines and auxiliaries was discharged through the cylindrical copper vessel mounted on the deckhead at the forward engine room bulkhead. Leading forward from it is a large pipe which is the exhaust steam pipe to the funnel. Inside this pipe is the feed water pipe to the boiler. This pipe is now disconnected, but in

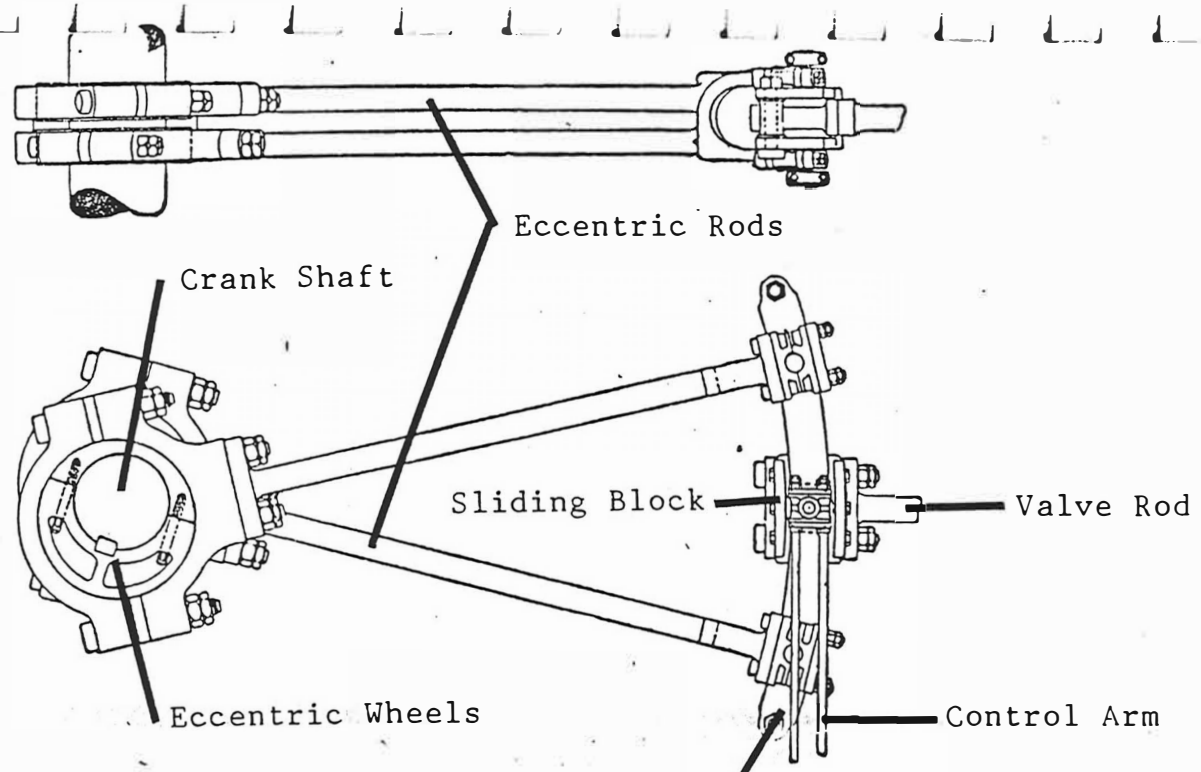

The drawing to the left shows the links in neutral position. In this position the link quadrant oscilates about the midpoint of the quadrant and induces no valve motion. As the link is pulled up or down by the control arm, the upper or lower eccentric rods come gradually into play causing the engine to run in forward or reverse.

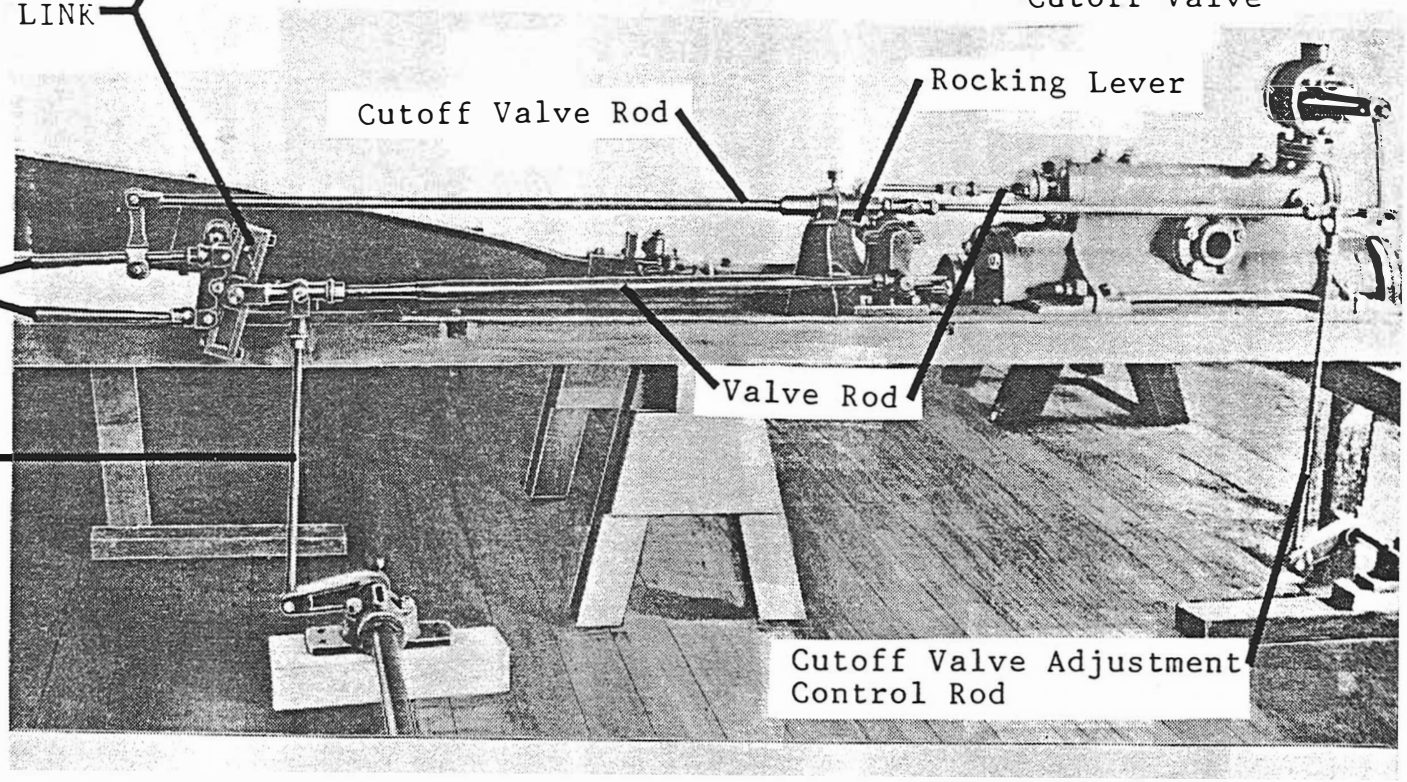

FIGURE 3 STEVENSON LINK and VALVE GEAR

the original design was a feed heater or heat exchanger in which some of the heat of the exhaust steam was transferred to the water being supplied to the boiler.

In 1928, a considerable increase in efficiency was obtained by installation of a jet condensor (see fig. 4) which utilizes a water jet to condense the steam, and a steam powered vacuum or 'air' pump to create a vacuum on the exhaust line. The steam so condensed could be fed back to the boiler, but the main advantage in the case of the **Tutshi** was the increased operational efficiency due to an increased pressure differential across the LP cylinder. The cooling water supply to the jet was drawn from a sea well by the vacuum created by the air pump.

The primary purpose of the main feed pump was to supply water to the boiler at a pressure higher than the boiler pressure of 160 psi. The pump is a simplex, single cylinder, externally packed plunger type which was chosen for its ability to perform satisfactorily even when pumping gritty water. It drew water directly from the sea well located in the lower engine room and was cross-connected with the other auxiliary pumps. The steam engine is directly connected to the pump plunger and the slide valve on the steam end is controlled by a shuttle valve.

The fire main and auxiliary pump is a duplex reciprocating piston type pump. The rod of each steam cylinder is connected directly to a piston at the pump end. The steam valve motion is controlled by a simple rocking gear working off the piston rods.

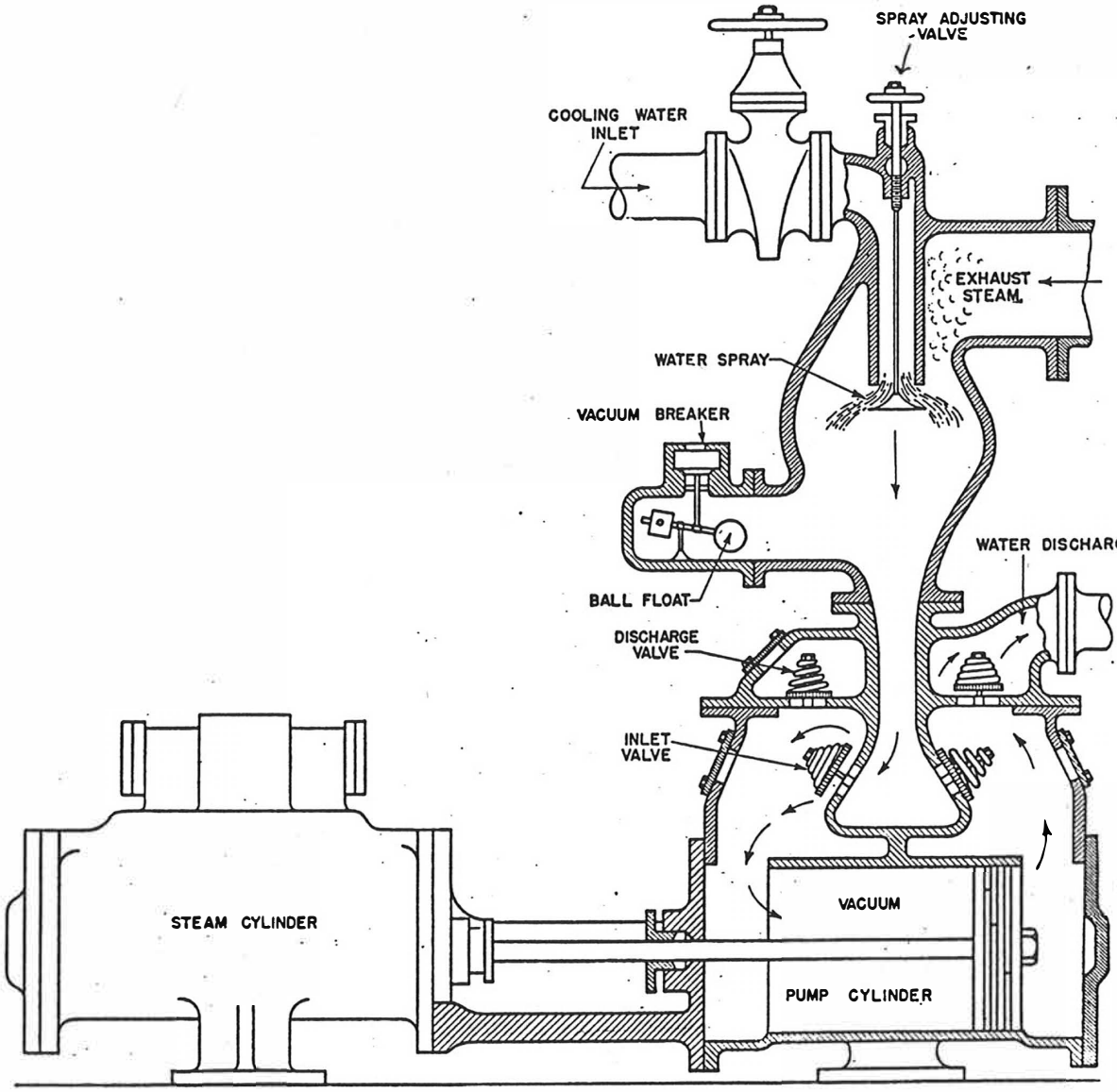

Fig. 4—Low-level low-vacuum jet condenser.

FIGURE 4 JET CONDENSOR
Section

The operational principle is that the piston of one cylinder works the steam slide valve of the other cylinder thus controlling its action. This pump was cross-connected with the main feed pump so that either could perform the critical function of supplying feed water to the boiler, in addition to supplying the fire stand pipes and domestic water service aboard the ship.

The two generators are simple vertical steam engines directly connected to the dynamos which consist of rotating armatures and fixed stators. In principle, the operation of these engines is similar to that of the main engines, that is the entry of steam to the cylinder is controlled by a slide valve which is in turn controlled by an eccentric on the shaft. In addition, these engines are equipped with shaft governors, devices which automatically control engine speed with the changing electrical loads that would be placed upon them. The generators produce 120v DC power for lighting and the electric fireplace.

The hydraulic pump and steering gear is a duplex reciprocating pump used to provide water under pressure for the operation of the hydraulic steering gear. The helmsman had the option of manual steering by means of the wheel which was connected with sheaves and 1/2" steel cable from the bridge to the tiller, or by means of the hydraulic steering lever. The lever was connected through vertical shafting, 1/4" cable and a

lever mechanism to a valve in the engine room which directed the hydraulic fluid (water) to one side or the other of a long hydraulic 'servo' cylinder. The piston of this cylinder was connected directly to a 3/4" diameter main tiller cable loop which controlled the tillers of the four main and two monkey rudders. It is possible by means of this system to provide a fast response at the rudders which would be essential in river navigation, and useful in the sudden winds on the lakes.

Miscellaneous Fittings

Water intakes for the ship were in the form of wooden or metal boxes or sea wells found in the bottom of the ship that are open to the water. Suction pipes from the various pieces of equipment drew water from the wells. This method avoided protrusions on the bottom of the ship, an important consideration where grounding was a possibility. There are three wells in the lower engine room area, one of which was for the exclusive use of the jet condensor. In addition to these three wells, there is another well constructed from an oil drum, containing an intake, suction and steam coil. It appears likely that this was added by the crew to supply hot water to their shower.

Two steam operated bilge siphons one on the port side opposite the waterleg of the boiler, the other at the aft starboard end of the boiler snag room, used steam in the venturi principle (a tube with a short, narrowed centre section, so that a fluid flowing through the centre section at a higher velocity

that through an end section creates a pressure differential, a vacuum) to pump water from the bilges.

The oil tank system installed in 1925 provided approximately 3,400 gals. of fuel capacity. The fuel used was bunker 'C' which necessitated pipe-in-pipe steam heaters on the supply lines to facilitate flow and a steam oil heater to bring the fuel up to ignition temperature. Two oil pumps were fitted and the firebox grate were overlaid with brick to provide a suitable firebox. BYN records indicate that the **Tutshi** burned 27 barrels or 850 gals. of oil on an average trip. The ship continued to burn wood for stand-by and as a means of pre-heating the oil when starting up.

Communication between the wheelhouse and engine room was via a standard ship's telegraph. A command from the wheelhouse was repeated mechanically on the telegraph mounted above the Engineer's station. The command was acknowledged by the engineer sending the same signal back, which moved the interior monitor on the wheelhouse unit. Signals in either direction were accompanied by the ringing of automatic bells, or 'jingles.' In the wheelhouse area there are remnants of speaking tubes, which extended down to the engine room, and which may have served the Captain's cabin, located directly under the wheelhouse, as well. There was also several means of control between the engine room and fireman's pit at the front of the boiler. There is evidence of a system of cables and

'bob' weights which gave the fireman positive confirmation that the main feed pump was running. In addition, on other Yukon ships it was common to have a pulley system which allowed the fireman to control the opening and closing of the main feed water valve at the pump.

Alterations to the S.S. Tutshi

As more and more tourists were making the trip to Atlin and Ben-My-Chree, it became necessary to make changes in the carrying capacity of the **Tutshi**. Only three years after the launching of the Tutshi, six staterooms were added to the Texas deck. This addition brought the passenger carrying capacity up to ninety. In 1922 an additional ten cabins were added on the Texas deck and quarters for the steward's crew were included on the freight deck. The **Tutshi** could now accommodate one hundred and ten passengers. Once more in 1926 staterooms were added to the Texas deck. Two rooms were added extending the Texas deck as far aft as possible and still have a room large enough to contain the usual bunk bed for passengers. About 1949 more changes occurred. The forward saloon or observation room was enlarged requiring alterations of the rail and passage around the stairs.

As with any structure and machinery, repairs and upgrading take place over time. The **Tutshi** went through several repairs and modifications to its operating system. In 1925 the engines were converted to burn oil. This procedure included the installation of two fuel tanks (from the steamer Alaska) on both

sides of the freight deck and a preheater and oil burner at the firebox. The **Tutshi** would continue to burn wood when standing by (waiting) and for startup power. Prior to the conversion the **Tutshi** would burn an average of 775 cords of wood in a season. After the conversion she would burn an average of 72 cords each season. This particular conversion increased the fuel costs from fifty-seven cents a mile in 1924 to seventy-five cents a mile in 1925. The conversion was done to eliminate the noise and disturbance to passengers when refueling at night. It also cut out the risks involved in pulling up to a rocky shore to take on wood. A year later extra trusses were added under the oil tanks; deck canvas was replaced; four new rudders installed and the cracked shaft of the sternwheel had to be replaced. This meant taking apart the wheel and rebuilding it. When it came time to replace expensive, and sometimes hard to get, pieces of machinery, if at all possible, the pieces were salvaged from steam boats that had been abandoned or taken out of service. Such was the case in 1927, when new engines from the Seattle #3 were installed. The installation of these engines meant a savings of fuel costs in running the **Tutshi**. Fuel costs dropped from 65 cents a mile in 1926 to 46 cents a mile in 1927. The following year a steam condenser was installed; the hull was recaulked and had galvanized metal sheathing applied in places of wear; hog chains and paddle wheel were repaired. Cylinder timbers were strengthened; additional toilet facilities were added on the Saloon Deck and the superstructure was repainted in 1929. A year later further

repairs were needed on the cylinder timber fastenings; 74 new tubes were installed in the boiler; and insulation was added to the steam pipes. In 1932 hog chains were replaced with heavier ones and portions of the hull planking was replaced, painted and caulked.

Lake travel in the Yukon was less risky than river travel to the hull of a boat. The yearly damage to the hull of the **Tutshi** was minimal if any at all, therefore there was no need to pull her out on to the ways at the close of each season. According to the annual reports, there is one period of seven years from 1921 to 1927 , when the **Tutshi** was not hauled out for repairs. At Carcross, near the swing bridge crossing the Nares River, the ice rarely freezes over, even in the coldest winters. This phenomenon is a result of the deep waters of Lake Bennett, which are always a few degrees above freezing, rising to flow through the shallow and narrow Nares River. The warmer water comes to the surface and prevents ice from forming. This ice free area, just east of the swing bridge was a perfect location to moor the **Tutshi** for the winter. There was no need to fear that ice would crush the hull. Because the **Tutshi** was left in the water the hull did not need to be caulked and painted each year. Every three or four years the **Tutshi** would be hauled out to paint the hull and fix any hull damage that had occurred over the past several seasons.

In preparation for haulout the hog chains were loosened so that when the ship was on the ways the chains would not be under tension. After a season in the water the bottom of the boat is

probably no longer flat. Once out of the water the weight of the ship would force the hull down to touch the timbers of the ways, putting an incredible amount of stress on the chains. The next step is to place the haulout cables around the hull, one around the bow, two through the freight deck and one through the engine room. The ways then had to be liberally lubricated with tallow to reduce friction. Between the hull and the ways were placed a series of butter boards or cradles, which were wooden sleeves that fit over the ways and moved with the vessel up the ways. Once all was in place the cables were attached to three wooden capstans with four long poles sticking out, similar to a wheel hub with spokes. These were turned round and round by horses and men. It was important that the three capstans be turned in unison so that pressure was equally placed along the length of the vessel and not cause any damage to the hull. Once the vessel was hauled up as far as was necessary, it was then put on cribbing. This was done by placing a series of jacks under the hull and carefully leveling it. Once the vessel was level and about 12-14 inches above the ways, cribbing was placed under the hull to support it for the winter.

The Tutshi's Retirement

The tourism industry was strong and healthy in the Yukon before World War II. The **Tutshi** could only handle a fifth of the tourists who wanted to come to the Atlin area. Some of the cruise boats had been used during the war and were lost at sea. All the cruise lines were affected but they did not build to

replace the lost ships. Instead they cut back on the number of cruises going north and this had a devastating effect on the **Tutshi** trips. There were still many people who wanted to go north, but there were not enough cruise ships available. The companies could no longer justify the cost of having a crew layover in Skagway for 36 hours, 3 times a week. While interested passengers from the cruise ships were taking the excursion into Ben-My-Chree, the cruise ships would standby at Skagway for 36 hours waiting for these passengers to return. There was the attempt to fly tourists into Atlin but the planes could only carry 38-40 passengers on one flight. By 1955 it was apparent that business was not going to improve so the excursions were stopped and the **Tutshi** was hauled out of the water for the last time.

Also, the unions began to get involved in the hiring of the crew members. The regulations were stating that if BYN Co. were hiring men for 2 or 3 months, they had to pay them for the whole year. This was going to cause some hefty financial burdens on the company. Another factor that may have had some impact on the decision to stop the sternwheelers was that since the war new safety regulations were put into effect which would probably force the company to have some expensive work done to the **Tutshi** to meet the regulations.

Restoration Program by Y.T.G

The Yukon Territorial Government acquired the **Tutshi** from the BYN Co. in 1971 for the nominal price of $1.00. The

following year YTG began the process of stabilizing the vessel and preventing further deterioration. The **Tutshi** was placed on new cribbing away from the water's edge to escape the periodic spring flooding of Nares Lake at Carcross. A fence was installed to provide some protection against vandalism. The **Tutshi** was scraped and painted in 1977 by Carcross Community College students under a L.I.P. grant. The Yukon Government's Parks and Historic Sites Division recovered the exterior decks with plywood and roofing tar to stop water damage below. Windows and doorways were covered with 1/4" plywood painted to simulate the appearance of glass. In 1982 Katimavik was involved cleaning up the freight deck, scrapping old tar off the Texas deck and retarring it. Wood work on the Texas deck was scraped in preparation for painting. In 1983 doors and windows that had been reproduced over the winter were installed where needed. The windows were fitted with lexan rather glass since vandalism had been a recurring problem in the past on this site. Moulding and trim replacement pieces were fabricated and installed. Canvas decks were scraped and retarred after severe weathering effects since the 1977 repairs. More scraping, sanding and painting of the exterior took place. The protective frame which surrounds the boiler to protect it from shifting freight was reconstructed. The following year restoration work was conducted primarily on the Saloon deck: broken tongue and groove cedar were replaced in decks and bulkheads, some knee braces (ceiling supports) replaced, dowelling removed from smoking room to replace some in main dining area, cupboards

replaced in pantry, some boards replaced in linen closets, cupboards around aft king post rebuilt, corner bins in smoking room restored, Observation lounge, dining area, purser's cabin, pantry, 3 cabins and one washroom painted. The painting of the exterior of the entire vessel was completed except for the paddle wheel. On the Freight deck broken support frames and warped deck boards were replaced. Mahogany panels and trim were produced to recreate the appearance of the original oak panels and mouldings in the dining room. In 1985 YTG Occupational Health and Safety Branch required that all asbestos be removed from the vessel before work crews began their work in May. In March all the asbestos insulation covering the boiler, pipes and engines was removed and disposed of by a certified asbestos removal company. Alex Barbour, senior marine engineer with Parks Canada inspected the engines and boiler and provided valuable information on vessel maintenance and conservation. The boiler was cleaned according to A. Barbour's instructions and a funnel cap was fabricated and installed on top of the funnel to prevent further water damage to the boiler. Twenty-four interior doors on the freight deck, eleven interior doors on the Saloon deck and two louvered doors for a display washroom on the Boat deck, were installed. Work was also concentrated on applying poly-kote (a rubber compound) to the Wheelhouse, Texas and Skylight decks to prevent further leakage into the vessel. New canvas was laid on the Saloon and Boat decks, and painted several coats. For safety purposes support beams and posts were installed on the freight deck to stabilize

the Saloon deck. Treads and risers on stairways were replaced where necessary on port and starboard sides. Cedar tongue and groove were replaced where broken and cracked. Door frames, shelves and three cupboard doors (2 in Engine Room, 1 starboard washroom) and 2 tongue and groove doors under stairwell were reconstructed based on pieces of original door. Main cargo area was sanded and port bow and starboard bow painted. On the Saloon deck hatches were opened to the Freight deck and protective railing reconstructed. On the Boat deck hatches were opened to the Saloon deck and protective railings reconstructed.

Heritage Branch was also responsible for developing the interpretive displays in the Visitor Reception Centre. Visual displays are a very effective aid to any interpretive program. Do not hesitate to use them when answering the question of a visitor.

Ship's Crew and Responsibilities

The smooth operation of a sternwheeler depends on a well organized unit of individuals who have an order of command and are fully aware of what their work is.

Master Pilot

The Master Pilot of a sternwheeler had worked long and hard to reach that position of authority and control over the running of a ship. The certified position of Master Pilot was most often obtained through an apprenticeship program that could take many years. One critical requirement of the master was that he

had to be a British subject. The certificate is based on the level of competency of the individual to operate a vessel on a particular type of waterway. To gain the appropriate experience it was usually necessary best to work up through the ranks of officers. Working his way from second mate to first mate, on to cub pilot, then pilot and once enough experience had been obtained and a position became available, the new master would be assigned his own vessel. He did not necessarily need to be intimately familiar with the engine room, steward's and purser's functions but he knew what needed to be done and how to get it accomplished. To safely operate the vessel the master pilot needed to know the waters of the lake or river extremely well. The position also required a knowledge of the vessel, the techniques and tricks of manoeuvring the vessel, how to handle the men on the crew and the delegating of authority. All of these abilities required the experience gained through the apprenticeship period.

The Master spent most of his time on duty in the wheelhouse, or as those on the riverboats called it, monkey island. Work shifts in the wheelhouse varied depending on the preference of the master and pilot as well as on the number of pilots available. If the 24 hour period was to be split by 2 pilots then each man had to work 12 hours, either 12 on and 12 off or 6 on and 6 off, twice a day. If there were 3 pilots then each would only need to work an 8 hour day.

The position of Master pilot required a certain amount of paper work. The Master of each ship kept a log book recording

arrival and departure times, fuel taken aboard and any unusual occurrences which may have taken place. The Master also signed payroll forms at the end of each month for the crew on his ship. The Master was paid, in the late 1930's, $3,600 a season.

The Master's and Pilot's cabins were located at the forward end of the cabins on the Texas Deck. This gave them immediate surveillance of the river in the event of an emergency if off duty. Since their hours of sleep may be at any time during the day or night passengers were obliged to be quiet when near these cabins. The cabins for officers were considerably larger than the staterooms. The cabins had one bunk with drawers below it, a clothes closet, table and chair and heating pipes. Officers were expected to wear their uniforms when in the presence of passengers.

Captain John McDonald, better known as "Scotia Mac", was the Master of the **Tutshi** from 1919 to 1951.

Pilot

The pilot would assume the responsibility of operating the vessel when the Master was unavailable or off duty. Since the pilot was most likely in training to be a master, he was expected to be as familiar with the lake and river conditions as the master. Pilots on sternwheelers were not pilots in the usual sense of the word meaning someone who is not one of the ship's officers and whose sole responsibility is to bring the vessel into port. The pilot had to perform just as the master

in running the ship. His salary was $2,800 a season in the late 1930's.

Engineers

The responsibility of the engineers was to keep the engines and all mechanical systems working as reliably as possible. A chief engineer oversaw the activity in the engine room and strove to maximize the efficiency of the consumption of the available fuel. The throttle, which controlled the amount of steam that went into the engines and dictated the speed of the vessel, was found in the engine room. Here also was found the reversing pump for changing the direction of the wheel. The commands for speed and direction came from the master or pilot in the wheelhouse. It was imperative that the engineers and pilots work closely together. The engineers also supervised the firemen who fed the boiler to maintain the level of steam pressure necessary to comply with the orders from the wheelhouse.

The maintenance of the engines required the constant lubrication of moving parts and inspection of valves and fittings. The engineers had to be able to make a wide range of repairs as they occurred as it would be impractical to wait for parts to be sent from Carcross. The engine room was therefore equipped with a variety of tools and machines with which to make the repairs. The engine room was kept spotless which reflected the amount of care that was taken to maintain the engines. A certain amount of paper work was required of the engineers to

keep stock of spare parts needed for repairs. A log book was kept to record engine room activity such as fuel consumption, repairs and shifts.

The Engineers' quarters were located on the Texas deck as they held the rank of officers.

Mates

The First and Second Mate had the responsibility of overseeing the manual labour necessary to run a sternwheeler. The first mate had to supervise the loading of freight since he was responsible for the trim of the vessel. The paddle wheel achieved a deeper purchase in the water and provided better steerage when the stern was lower than the bow. The mates had to be sure that ropes, blocks and tackles were in good condition; that the bilges were regularly checked for leaks; that a record of the crew's hours was kept; and that the life boats were water tight. The first and second mates usually worked a 12 hour shift and the first mate because of his seniority usually worked the day shift. Despite this advantage, he was always on call because there were functions for which he was specifically responsible.

Most mates had at one time worked as deck hands. An individual had to be British subject and hold a certificate of competency as laid out in the Canada Shipping Act to become a mate. A four hour written and oral exam, usually administered by the steamship inspection office in Vancouver, was taken by hopeful candidates. To prepare for the examination a ten day

preparatory course was available in Vancouver. If the individual was successful in his examination he automatically became a member of the merchant seaman's guild and one of the ship's officers. His salary was between $2,800 and $3,000 a season.

An ambitious mate could work his way into the position of master. The progression was: second mate, first mate, cub pilot, pilot and master. The only way to advance up the ladder to master was to obtain a thorough knowledge of the waters and the operations of the ship. This was only possible through experience in the wheelhouse, so after a usual 12 hour shift the ambitious mate could spend another 6 hours at the wheel. All this had to be done under the supervision of a certified Pilot or Master.

Chief Steward

The Chief Steward had the responsibility of ensuring that there was adequate food on board for all meals and that the vessel's household needs were properly tended to. His workers consisted of the galley crew and the cabin crew. The number of crew and expected passengers governed the quantity of food and housekeeping requirements (linens, towels, etc.). The chief steward determined the menu for the trip by the food he ordered.

The chief steward was also the keeper of the first aid kit and attended to the scrapes and cuts that occurred with some frequency. His cabin was typical of an officer's, a single bunk with drawer below and a table for the endless amount of paper

work he had to complete.

Purser

The Purser handled all freight consignments and dealt directly with all passengers. He dealt with all paper work associated with the freight carried; sorted mail for all stops; assigned the berthing and attended to the needs of passengers.

At the start of the season, prior to launching, the purser was busy completing the paper work to hire the crews. He had to collect the appropriate signatures and approval from the customs agent. As many of the men came from the United States, payroll and immigration inspection was also handled by the purser.

The purser was always the last person to board since it was his duty to pick up any last minute messages and mail. His first task once aboard was to compile a list of all stops for the upcoming trip. This had to be distributed quickly to the Wheelhouse and Engine room. This list of stops was collected from passengers tickets, freight bills and mail sorted according to destination.

The purser collected tickets, sold tickets to late arrivals and assigned passengers to staterooms and to particular meal sittings. He had a safe in his office in which to store any valuables a passenger might have and since firearms were not allowed in the staterooms, they too, were stored in the purser's cabin. The purser often served as an American Express agent and he was commissioned to take affidavits; both tasks provided him with additional income. His salary was $1,800 a season. At his

office he would sell post cards, perhaps playing cards and advertise any special activities such as an evening dance on the freight deck. It was the purser's formidable task of notifying passengers, day or night when their destination was approaching.

Deck Crew

The Deck Crew was comprised of the fireman who reported to the Engineers, the deckhands who reported to the mates and the galley crew who reported to the Chief Steward. Deckcrew and Firemen ate on the Freight deck.

Firemen

On the **Tutshi** three firemen worked alternate shifts stoking the boiler. His shift would be no more than 4 hours at a time as the work was extremely demanding constantly opening and closing the firebox door to keep the steam pressure up to an effective level. The work was also very hot having to face the fire every time the door was opened. Following the conversion to oil his task became somewhat easier. He no longer had to keep the fire going by throwing in logs, instead he monitored the valves and the burning oil within the boiler. His salary was approximately $1,200 a season.

Deck Hands

The Deck Hands were responsible for all physical labour on the freight deck. They provided all the physical labour involved with loading freight onto the ship. The freight had to

be wheeled on hand trucks from the warehouse to an assigned place on the freight deck. At each stop along the way the deck hands would unload the cargo for that destination and load anything that was going back to Carcross. The Deck Hands also had to load fuel at the wood stops as required. Each deck hand had to put in a two hour wood watch per day that required moving the wood supply to the area of the stokehold for the firemen stoking the boiler.

Other duties might include repairing a damaged rudder or paddle wheel bucket or helping to remove the ship from a sandbar after grounding.

The Deck Hands' quarters were situated aft of the engine room and immediately forward of the transom. Deck Hands trying to sleep in the cabin would be subjected to the steady sound of water splashing against the outer surface of the transom. Deck Hands were on 24 hour call and were expected to work long hours if necessary as it was important to maintain a schedule dictated by the cruise boats out of Skagway. They were paid overtime rates for any hours over the normal watches. The turnover each year of deck hands was high because the work was unskilled and strenuous and there was no status associated with the position. A Deck Hands' salary was roughly $60 a month.

Cabin Crew

The cabin crew had two domains of work. They waited on tables in the dining room and cleaned and made beds in the staterooms as cabin stewards. Their work day started at 6 a.m.

when they prepared the dining room for breakfast. Each steward was assigned certain tables to serve. Extra special service could be followed by a suitable tip. After the meal was finished and the tables cleared the stewards then had their meal. The tables were then set for the next meal of the day. However, if it was the evening meal, the tables would be covered with a heavy green table cloth so they could be used for recreation by the passengers.

After the tables were set for lunch, the waiters became cabin stewards by a simple change of clothes. Off came the white shirt, bow tie and waiter's jacket and on went work clothes. In each cabin the steward would make the beds or change the linen if there was to be a change of occupants; sweep the carpet; and clean the drinking glasses. Soiled towels and used soap were replaced. The cabin stewards also cleaned the officer's cabins.

Galley Crew

The galley crew's primary responsibility was to prepare the food for passengers and crew. This was handled by a chief cook, second cook, baker, pantryman, second pantryman, messman and dishwasher.

All the cooking was handled by the cooks, each having their own specialty. The bakers took care of all the pastries, cakes and pies, again with particular specialties. These men worked on the port side of the freight deck. The galley and bakery were connected to the pantry next to the dining room by a

dumbwaiter. The pantryman would distribute the food over the counter to the waiters serving the passengers. He also prepared the salads, shrimp cocktails and mayonnaise. The mess man was responsible for peeling the vegetables to be served each meal which was no small task once the **Tutshi** started carrying 110 passengers in 1922. He also helped the dishwasher with cleaning the pots and pans.

The galley crew usually worked long hours from five in the morning until late in the evening. They were not paid any overtime, but their wages were higher than those paid to the deck crew.

Passengers

The passengers who travelled on the **Tutshi** were usually of two kinds. The one kind was the local person needing transportation from somewhere on the lakes to Carcross or other destinations in the area. These people may have been trappers, miners or people living in Atlin or Tagish. Many of these people would have a boat of their own and would rarely use the services of the **Tutshi** as it cost money. The second kind of passenger and the most frequent traveller on the **Tutshi** was the tourist. These people were coming to the Carcross and Atlin area as part of a packaged holiday tour. These passengers were coming from all over Canada, the United States and Europe. The reputation of the beauty of the area had become known world wide and people were willing to pay to come, even for a short visit.

Communities Served by the Tutshi

Atlin (Tlingit word Aht-lah, means "Big Water")

After the discovery of gold on Pine Creek in the summer of 1898, Atlin became the supply centre for the gold miners and prospectors. The need of transportation into the area was the impetus for initiating sternwheeler service between the railhead at Bennett and later in 1900 from the nearest rail and water connection at Carcross, to Atlin.

The prospectors arriving in 1898 claim to have found the remains of primitive mining operations that they estimated to be fifty years old. The suspicion was that there may have been Russians in the area during the mid 19th century. Fritz Miller and Kenneth McLaren hiked over the White Pass in 1898 but rather than go to Dawson City they went into the Atlin area. They worked briefly that winter and then returned to Juneau in July to officially register their claim on Pine Creek, south of Atlin. Within days officials of the BL & KN had gone into Discovery on Pine Creek to bring out some gold for display. News of the gold find reached Victoria by mid-August and over the next five months 5,000 stampeders arrived in Atlin. Atlin became the supply centre for the mining activity. BL & KN was running the Gleaner from Bennett to Taku where passengers and freight were transshipped via a tramway to the Scotia and then taken to Atlin. With the completion of the White Pass railway as far as Whitehorse, White Pass purchased BL & KN and by this gained control of the transportation network in the area. To run its water transportation division, White Pass & Yukon Route

established the British Yukon Navigation Co. The BYN continued to run the Gleaner and Scotia.

By 1910 mining activity in the Atlin area was beginning to wane. However, a tourist industry followed shortly creating a second economic base for the Atlin area. Tourists were wanting to travel to Atlin to see the beauty of the mountains and glaciers in the area and to fish and hunt in the wilderness. Atlin was gaining the reputation of being called "Little Switzerland". In 1916 White Pass built the Atlin Inn provide adequate accommodation for the number of tourists wishing to spend some time at Atlin. The Atlin Inn offered a golf course, tennis courts, mineral spring, boating and guiding facilities and tours of the famous Llewellyn Glacier. That same year the Scotia was replaced by a gas powered vessel called the Tarahne. It was larger than the Scotia but not large enough. In 1929 an extension was added to the Tarahne making it 119.3 feet long. Both the Atlin Inn and Tarahne ceased operating in 1936 due to a rapid decline in the number of tourists coming into the area. The highway connecting Atlin with the Alaska Highway was built by the Canadian Army in 1949.

<u>Ben-My-Chree</u> (Gaelic for "Girl of My Heart")

Ben-My-Chree was the primary destination of the **Tutshi** from 1937-1955. It was an English country garden carved out of the wilderness of northern British Columbia by Otto and Kate Partridge in the early 1910's. Otto and Kate Partridge had come to Bennett in 1898 where Otto began to manage Bennett Lake &

Klondyke Navigation Co. He was there when the Ora, Flora and Nora were built. The Partridges moved to Millhaven Bay at the north end of Lake Bennett in 1899 to set up a sawmill. This mill lasted until 1901. They stayed at Millhaven for the next 9 years trapping and gardening. In 1910 the Partridges went to West Taku Arm to spend the summer but they liked it so much they stayed and built what was to become Ben-My-Chree. The estate grew into well-cropped lawns, boardwalks and flower beds and a trellised walkway to a wishing well. It was the flower gardens that attracted the tourists to Ben-My-Chree. They had sweet-peas, delphiniums, asters, columbines, peonies, pansies, monster pansies and many others. The delphiniums grew 10 feet tall. **Tutshi** passengers showed such interest in the gardens that White Pass arranged for regular excursions to "West Taku Arm" as early as 1925. The Partridges arranged for many of the comforts and distractions of a culture they had left in England. A full size pool table dominated one room, an organ was one of Mrs. Partridge's favourite pastimes, music was provided by a phonograph, a sewing machine was used to make clothes and a usable library was a must. Visitors to Ben-My-Chree were offered a glass of home-made rhubarb wine. Some of the older wine was kept for the politicians and movie stars who visited there.

Otto Partridge died in 1930 and Kate died in January 1931. White Pass took over the property, providing staff to take care of the gardens and prepare fine food for the visitors. They

continued to bring tourists to the gardens until the Tutshi was pulled from the water for the last time in 1955.

Bennett

Bennett, situated at the head of Lake Bennett, was a product of the Klondike Gold Rush in 1898. After the stampeders had made their way over the White or Chilkoot pass, they found themselves faced with the task of having to build a floating vessel with which to get themselves and their gear to the gold fields outside Dawson City. This task took them many weeks to complete since many, if not most, of them had never before built a boat. For those that worked quickly to get their boat built, they had to wait until the ice went out from Lake Bennett, which that year was June 6th. That day and several days after, 7,100 boats sailed away destined for the gold fields. That spring Bennett swelled to well over 20,000 men and women, all with gold and fortune in mind. Bennett was the location of the largest tent city the world had ever known. A church was built, a newspaper established and hotels and restaurants were in operation. Many businesses which started here later moved to Whitehorse when the railroad gave it special status as the transportation hub of the Yukon. When the Klondike gold rush subsided in 1900, Bennett no longer had the role of being a major stop over on the way to Dawson City. White Pass & Yukon Route had, with its railroad and growing fleet of sternwheelers, established a transportation network from Skagway to Dawson City. Bennett became an important tourist stop for passengers

enroute. Much of the rail bed maintenance was monitored by staff living at Bennett. Bennett was continually inhabited from 1898 until 1983 when the White Pass & Yukon Route were forced to stop running the train when mineral prices dropped.

Carcross

Carcross is located at Nares River, a narrow body of water between Lake Bennett and Windy Arm and Tagish Lake. The Indian name for Nares River was Na Ta Sa Heenie, which means River of Clear Water. Carcross was formerly known as Caribou Crossing because of the huge herds of mountain caribou that used to cross the narrow channel here. The first inhabitants here were Athapaskan Indians from the Tagish area who spoke a Tlingit dialect. These people had been coming to this area to hunt caribou, moose, small game and water fowl for many years before the arrival of the gold rush stampeder and the White Pass & Yukon Route railroad, which passed through Caribou Crossing. This water route was used by the stampeders heading to Dawson City during the Klondike Gold Rush in 1898. The North West Mounted Police reported in 1898 that a cabin had been built for a detachment of its men and a stable for horses on the south side of the river. The following year the NWMP reported that Public Works had constructed a telegraph line from Bennett to Dawson and had built a telegraph office in Caribou Crossing, also on the south side of the river. By 1900 there were two saw mills operating in Caribou Crossing: the Caribou Crossing Sawmill and Planing Mill and the Upper Yukon Consolidated Co.

The U.Y.C. Co was also known as King's Mill and primarily built barges. However, this company only lasted two years because of unpaid lease rent and timber dues.

The presence of a railroad at the meeting of two lakes was cause enough for Caribou Crossing to develop into a transportation centre. The railroad, completed on July 29, 1900, would connect with sternwheelers which carried miners and tourists to the lakes east and south of Caribou Crossing.
To cross the narrow stretch of water at Caribou Crossing a swing bridge was built for the railroad. It is the most northerly swing bridge in North America and the oldest bridge in the Yukon. Caribou Crossing prospered during the first decade of this century serving as a port and distribution centre for the Conrad Mining District on Windy Arm and Atlin. Conrad was mined for its quartz content and the Atlin area was known for its gold. The Conrad mine closed in the years prior to the First World War.

In 1901 Bishop Bompas, an Anglican clergyman, arrived in Caribou Crossing and bought a small bunk house on the south side of the river in which he conducted church services and taught school. He used the bunkhouse until 1903 when a mission school was finally established. St. Saviour's church was erected and consecrated in 1904 on the south side of the river. It was moved across the river to where it stands today, in 1917. It is still used to hold services. The name of Caribou Crossing was officially changed to Carcross on October 1, 1904 at the request of Bishop Bompas.

The original general store, the Caribou Hotel and railway depot were destroyed in a fire on Christmas Eve 1909. Shortly after the fire a number of buildings were moved to Carcross from various towns and mining sites. Immediately after the fire, rebuilding of the town core was started. Matthew Watson General Store was moved into Carcross and for many years was made up of 3 stores which eventually were joined to form one store. The store looks much the same today as it did in the 1920's except for a change in the colour of the exterior.

Carcross is the home port for the **S.S. Tutshi** which was built in 1917 as a response to the growing tourist trade coming into the Yukon.

George Simmons, a resident of Carcross, started Northern Airways to fly the mail into mining camps at Atlin. Northern Airways provided service to this area from 1930 to 1950.

Sitting near the old railway depot is the narrow-gauge steam engine, the Duchess, built in 1878 and used for many years on the Taku Tram. White Pass purchased the Duchess in 1899 and after purchasing the tramway at Taku in 1900 began using it there. The Duchess could only pull one passenger car (48 passengers) and six flat cars therefore several trips were often required to transport the boat's full cargo of passengers and freight. The Duchess burned wood until 1917 when it was converted to burn oil. This little locomotive was retired from service in 1919. The Duchess is one of the oldest engines in North America.

The Carcross Indian cemetery is the final resting place of several of the Yukon's most famous individuals such as Tagish Charlie, Skookum Jim and Kate Carmack. They were credited with discovering the gold on Bonanza Creek which started the Klondike Gold Rush of 1898.

The mountain peak that is seen due west of Carcross is Mount Gray. The peak aft of the **Tutshi** is Nares Mountain. The large mountain north of town and to the right of the highway is Caribou Mountain. To the south are two main peaks. To the left is Montana Mountain and to the right is Brute Moutain.

Conrad

Conrad was an important mining community about 12 miles from Carcross on Windy Arm. It was named after Colonel John Howard Conrad who was the promoter and manager of some of the mining activity in the area. By spring of 1905 Conrad was developing claims on a large scale and continued mining until 1912. By 1907 Conrad had its own post office and postmaster followed over the next few years by stores, hotels, churches and a District Mining Recorder.

Many of the abandoned buildings at Conrad were barged up Windy Arm to Carcross.

Engineer Mine

Located on the east shore West Taku Arm, Engineer Mine was a hard-rock high-grade gold mine which operated from 1912-1931. It consisted of eight connected claims. **Tutshi** made regular

stops at Engineer for many years. By 1925 some 140 men were working at Engineer Mine.

Taku City

The narrow isthmus in Taku Arm created a physical land barrier between Tagish and Atlin lakes. To overcome this obstacle, a 2 1/2 mile narrow gauge railway, initially called the Atlin Southern Railway, was constructed in 1899. It was built to serve the Atlin Gold Rush. That same spring another company built a tramway to compete with the first. A year later the WP & YR bought out the company and completed the rail line. Locally known as the Taku tramway, it linked Tagish and Atlin Lakes, between Taku City or Taku Landing at the east end of Taku Inlet and Scotia Bay on the west shore of Atlin Lake. The Gleaner and later the Tutshi ran from Carcross to Taku Landing where passengers disembarked to take the 2 1/2 mile train ride to Scotia Bay. The Scotia and later the Tarahne picked up passengers at Scotia bay to take them across Atlin Lake to Atlin.

For the first two decades the steam locomotive Duchess pulled freight on passenger cars on the tramway. There was not a roundhouse at Taku so the engines had to back up for the return trip to Taku from Scotia Bay. In 1919 the steam engine No. 51, moved from its service on the White Pass rail line and was put into service on the railway line to replace the Duchess. It shuttled back and forth until 1931 when it was replaced with No. 52. No. 51 is now on display at the MacBride Museum in

Whitehorse. No. 52 was retired in 1937 and can be seen in Skagway.

After No. 52 was pulled from the tracks an old Ford track car was used on the Taku Tram. It had a V8, 90 horsepower engine that was chain driven and it could haul between 25 and 30 tons.

Section II

Roles and Responsibilities

This section was put together in the hope that it will help give you a better understanding of what is expected of you as an Interpreter/Tour Guide. It is by no means exhaustive and should be supplemented by further readings.

Please read this section over carefully. If you have any questions, do not hesitate to ask them. Remember that you must soon be a **Tutshi** expert. Learn all you can about the **S.S. Tutshi** - its history, operation and surroundings.

The first few days on a new job are the most difficult. There is much to learn and the first group of visitors will be a challenge. Remember. You will survive.

We assure you that you will survive. You have been chosen for the job because you have the qualities and capabilities necessary to perform the duties required for this kind of work. So relax, be yourself and remember to smile.

GOOD LUCK!

Philosophy of Interpretation

The Oxford Dictionary defines interpretation as the following "to make out the meaning of; bring out the meaning of, render by artistic representation or performance; explain, understand, in specified manner". Your interest will be to "bring out the meaning of" the **S.S. Tutshi**.

Effective interpretation is an art and as with any art forms, is not static. Interpretive programs must keep up with current research in order to be as accurate and authentic as possible.

Objective

The objectives of the interpretation program for the **Tutshi** is two-fold. The first being the interpretation of three basic themes of the site.

The second objective is to provide the visitor with an enjoyable, educational and entertaining experience. Hopefully this objective will help you approach your work with a more relaxed frame of mind. The tour should be a good time for everyone.

With these objectives in mind they will give you some basic guidelines when putting together your tour script.

Role of the Interpreter

It is extremely important for each member of the interpretive staff to understand his/her role and

responsibilities within the program. Each person is expected to have a good knowledge of the historic background information presented in Section I. This entails the historic context of the **Tutshi**, the history of the **Tutshi** and the operations of the **Tutshi**. From this information a comprehensive tour can be developed which should allow the visitor a thorough understanding of the **Tutshi**, the reason for its existence, how it fit into Yukon history and what is might have been like to have been a tourist on it.

Attitude

A professional attitude is required in order to perform the tasks asked of an interpretive guide. You have been selected by knowledgeable people who believe that you have the abilities to be a capable guide. The job will be very demanding and will involve learning as much about the **Tutshi** as possible and dealing with a wide range of people with different backgrounds, needs and expectations. You will learn with experience the how to deal with and respond to the visitor.

The key to the right attitude is motivation, understanding and sincere interest.

Also consider this quote:

"One of the attributes most desired in a guide is a professional attitude. This is difficult to define, but among other things it means doing what one is supposed to do without constant supervision. It also means going beyond the bare requirements of the job, when necessary, without thought of reward. People

with professional attitudes have enough respect for the job and for themselves to do what needs to be done to the best of their ability, never letting the site or themselves down. A professional attitude also means that the guide will not discuss our policies, working conditions, pay, or anything else of that type before guests; nor talk about his personal life and problems in front of guests; nor risk offending guests by expressing personal opinions on contemporary controversial issues." (Interpretation of Historic Sites, Alderson, Payne Low).

As employees of the Yukon Territorial Government you are front-line representatives who have direct contact with the visiting public. This is a large responsibility which must be taken seriously. Remember to be friendly and courteous at all times since you will be making a lasting impression on their visit to Carcross and the **Tutshi**.

The following are several points to help you achieve the common good of the operation of the site.

- Be punctual - you are expected to be on time as indicated on the schedule. This means being ready to work at 10:00 a.m. and not just arriving.
- Flexibility and teamwork within the interpretive staff, especially during the hectic tour season is very important. For example, if a co-worker is late returning from lunch, be prepared to take their next tour so that visitors do not have to wait.

- Strive to establish and maintain good communication between co-workers so that matters of mutual concern can be smoothed over easily.
- Don't hesitate to discuss problems encountered on the job with the supervisor.
- Study ways of rendering your job more efficient. Offer suggestions without hesitation.
- As an Interpreter at a Territorial Historic Site you are subject to close public scrutiny. Your personal appearance as well as your deportment play an important part in formulating public opinion. Abide by all common sense rules regarding manners (eg. stand to answer question; no smoking, gumchewing or eating at the VRC in view of Visitors).
- Never correct another Interpreter in front of a group.
- Watch your vocabulary! (eg. "Hey, would you guys ..." instead of "Good day, would you ...".)

Responsibilities

In addition to the primary responsibility of conducting visitors through the **Tutshi** you are expected to insure the safety of the visitor while on board the **Tutshi** and provide security of any and all artifacts on the vessel, as well as any attempt at vandalism. You will be asked to perform some fundamental housekeeping tasks in order to help keep the appearance of the **Tutshi** presentable to the public. In order to help with the keeping of visitor statistics you will be asked to keep a written record of the number of visitors on the tours you

conduct and the time of day of the tour. Comments, good and bad, made by visitors on your tours should be recorded and reported to your supervisor. Any questions from visitors that you are unable to answer should be recorded and answers found out at a later time.

a. Safety - It is crucial that you keep an eye out for possible hazards to the physical well-being of visitors while on the site. This may include anything from a raised nail on the freight deck which may catch the shoe of a visitor or the slippery surface of a wet canvas deck. It is your responsibility to ensure that all visitors safely leave the vessel.

b. Security - Few artifacts remain on board the Tutshi, however those that remain must be left alone where they sit. It is your responsibility to watch the visitor and ensure that nothing is moved or handled. Security also includes preventing any attempt to vandalize the structure of the vessel, be it bulkheads or windows.

c. Cleaning - As part of your daily responsibilities you are expected to perform some housekeeping tasks. As important as your appearance as Interpretive Guides is the general appearance of the **Tutshi**. Each day the areas of visitor traffic will need to be swept. The route through the freight deck and the stairs to the upper decks should be swept with a corn broom. Windows

in the Observation Room and doors with windows should checked daily. If dusty or full of finger prints clean the panes with a soft cloth and windex.

Fire Protection & Fire Evacuation Procedures

1. Components of Fire Protection System

a) portable fire extinguishers

All of the fire extinguishers on the boat are the multi-purpose (A.B.C.) dry chemical fire extinguishers. These are at various locations and are indicated on a plan of the boat and posted in the staff room and on the Freight deck.

These are good for fires involving:

- ordinary combustibles: wood,paper & cloths.
- flaming & combustible liquids: gasoline, oils, paints.
- flammable gases: propane, butane, acetylene.
- electrical: switches, motors, wiring, etc.

Discharge range: 5 - 20 ft.

Discharge time: 10 - 25 seconds.

You will be receiving training in the use of these fire extinguishers from the Yukon Fire Marshalls Office.

b) fire alarm system

This system consists of heat detectors located throughout the boat. When the heat detectors are activated an alarm bell located on the exterior of the boat aft of the starboard cargo door will sound. There are <u>no</u> pull stations to activate the fire alarm system manually. This system is tied in directly to the fire alarm panel in the Carcross Fire Hall.

In Case of Fire or Emergency

1. Don't panic.
2. Evacuate the visitors in an orderly fashion.
3. A back-up phone call should be made to the Fire Department.
4. Check all rooms. Ensure everyone is accounted for.
5. Fight the fire, only if it is small. A large fire is dangerous; more emphasis should be put on evacuation of visitors & staff.
6. Do not allow re-entry.

Other Points

All staff members should be familiar with the fire extinguisher locations. This is ultimately your responsibility. All staff should know how to call the Fire Department. The number will be posted. A plan will be posted showing location of fire extinguishers, exits, routes, etc. Bring any potentially unsafe condition to the attention of your supervisor.

Guided Tours

Guiding Visitors through the **S.S. Tutshi** is a skill that you will develop through time and experience. It takes practice and through the summer you will have many opportunities to practice . No one starts out as an accomplished Interpretive Guide. Remember that you will make mistakes, feel nervous and not always answer the questions asked of you. It will not take

long before you know where you are strong and where you are weak.

Some helpful hints:

- speak loudly and clearly, especially with a large group or when in an open area where Visitors may have a tendency to spread out. Do not speak too quickly, you have time to say what you need to say.
- try to stay in view at all times.
- stay in front of the group as you are the guide and i this way you can set the pace of the tour. Remember there may be a group following and it is important to your co-workers that you maintain a steady and predictable pace.

  You will quickly learn each other's pace so be as consistent as possible.
- avoid the use of "eh", "uh", "you know," "ok".
- keep the group together, remind them if you have to.
- SMILE, at least look like you're enjoying your work.
- try to be entertaining without being the focus of attention. The **Tutshi** is.
- Audience participation and a sense of humour help keep the interest of the group. Find jokes that everyone will like.

Scheduling Tours

The scheduling of tours of the **S.S. Tutshi** is a very important part of your work. Even though Visitors are on holidays they should not have to wait an unreasonable amount of time. It is a critical element of your work that as many as possible receive a timely, well conducted tour. Most visitors do not mind waiting a reasonable amount of time for a tour.

During the busiest times of the day it is not difficult to keep yourself occupied talking to Visitors or taking tours. During these times there are almost always enough visitors to form a full tour group of 20. It will not always be possible to limit your tour group of 20 but every step should be taken to do so, since you will find that this is the most manageable size - you can be seen and heard by all, you can keep the group moving and also watch the activities of the Visitors. During those times of the day when there will not be many visitors on site, you will be required to take tours of as few as 1 or 2 people. We cannot expect visitors to wait 20-30 minutes for a tour until more Visitors arrive, especially if there are 2 or 3 Guides standing around. While waiting for the next tour, Guides are expected to chat with the Visitors, ask where they are from and where they are heading. Visitors love to talk about themselves, where they have travelled from and some of their experiences along the way. Once they discover that you are interested in them, all you have to do is listen and perhaps answer a few questions.

Opening and Closing the Site

It is the responsibility of the Interpreter/Visitor Guide staff to ensure that the **Tutshi** is open and ready to receive Visitors each morning at 10 a.m. The staff should devise a routine by which nothing is forgotten. It is extremely important that all doors required to be opened are opened. Nothing disrupts a tour like the surprise of trying to open a door to a room in which the tour must go to continue.

1. open aft starboard cargo door used as entrance at the start of the tour.
2. open forward port cargo door.
3. open port door to Observation Room.
4. open starboard door to Observation Room.
5. raise Royal Mail flag on bow of Saloon Deck.
6. open forward starboard cargo door.
7. open forward starboard cargo door used for exit at end of tour.

At the end of the day the procedure should be reversed. This is also a good opportunity to look around for anything unusual. Perhaps something is missing or maybe some damage has been incurred. Also make note of any potential hazard to visitor safety. Look for things that may cause a Visitor to trip or stumble. Remember that many of the Visitors on your tours will be Senior Citizens and may have difficulty handling the stairs and uneven floor of the freight deck and canvas surfaces of the decks. Make mental note of the uneven surfaces and warn your

visitors of their existence.

Touring

Once you have collected some people for the next tour or if you have been assigned to a particular group from a bus tour, take them to the entrance of the **Tutshi** at the aft starboard cargo door on the freight deck. Begin your tour by introducing yourself, your name will be on your name tag but it is good public relations to give your name so the Visitor will feel free to call you by your first name. There is no need to give your last name. In your introduction you should inform the Visitor that the Heritage Branch Department of Tourism is responsible for the restoration of the **Tutshi**. This is also the time to inform the Visitor that eating, drinking and smoking are not allowed at anytime while onboard the **Tutshi**. Smoking is also not allowed anywhere on site. To make your job a little bit easier remind the Visitor that it is important that they stay in a group so that they can hear you and that they do not touch any of the artifacts. You can explain that by touching artifacts they leave behind oils from their skin that is detrimental to the condition of the artifact.

Tour Critique

In order to achieve the highest quality performance from an employee, a tour critique will be completed part way through the summer season. This is done to identify, for your benefit, strengths and weaknesses as a guide and provide the opportunity

to improve your skills as an interpreter.

A copy of the form is included in this section so that you will know what points will be evaluated. This will also give you an indication of what is expected of you. These are called performance indicators. The form is found in Appendix C.

The Tour

During the tour you should attempt to deal with the themes of the **Tutshi** site. The identified themes are:

a) the **Tutshi** as luxury tour ship

b) use of a steam operated sternwheeler on the Southern Lakes

c) operation of a steam system on a ship

Keep these themes in mind while putting together your tour script. The following script is only an example and not necessarily deemed to be taken as complete in itself. This is to be used as a guide only.

Good Morning. My name is _____ and I'll be your guide today. I'd like to welcome you onboard the **S.S. Tutshi** on behalf of Heritage Branch which is a part of the Department of Tourism for the Yukon Territorial Government. Heritage Branch has been involved since 1971 with the conservation and preservation of this historic site. But before I go on with the story of the **S.S. Tutshi,** I should tell you a few of the rules that we have for all those who come on board. We ask that you

do not eat, drink or smoke while on the tour and that you do not touch any of the artifacts. And one more thing, if you any questions while on this tour, please don't hesitate to ask me.

Let's begin by going onboard the freight deck and heading into the Engine Room. (Stand in the centre of the room and wait for Visitors to gather) In here are found the motors, pumps and engines, all steam operated, which bring this ship to life. Over head you can see the main steam pipe which conducts the steam from the boiler to the Engine room. We will be taking a look at the boiler a little later in the tour. At this junction the Engineer would have control over the amount of steam passing through to the engines by use of the throttle. On either side of the deck are found the compound engines. The term compound means that as part of this engine there are high pressure and low pressure cylinders on each side of the Engine room. The steam enters the cylinder through the slide valve alternately to one side and then the other of a piston which slides within the cylinder. The exhaust steam from the high pressure cylinder is delivered to the low pressure cylinder where it expands again, deriving more power from the steam. (Indicate) The pistons have a 6 foot stroke and turn the paddle wheel at an average of 20 revolutions a minute. They are capable of producing 450 horse power per engine. It is the Engineer's job to put into action the commands from the pilot in the wheelhouse. From the wheel house comes the command to increase the speed, full ahead or to slow down or to go in reverse. Communication between the wheelhouse and the Engine Room was by a standard ship's

telegraph located here above the Engineer's station. The command was acknowledged by the engineer sending the same signal back. This pump used a hydraulic system to make the wheel turn in reverse. The system used on this boat does this very quickly. The two generators provided electricity throughout the ship, lights in the staterooms, in the saloon and for the floodlight on the bow of the Saloon Deck. These engines are equipped with shaft governors, devices which automatically control engine speed with the changing electrical loads that would be placed upon them. They produce 120v of DC power. These other pumps (indicate) are for providing water for the staterooms, the galley, the showers and washrooms. Against the transom are found cabins for the deckhands and firemen who work on the freight deck. At this time I will give you a couple of minutes to look around and the we will gather again just outside the door on the port side.

On the port side mid-ship is the galley and pastry room where all meals were prepared for both passengers and crew by the cooks and bakers. The Galley Crew consisted of a chief cook, second cook, baker, pantryman, second pantryman, messman and dishwasher. The cooks would have their specialties that they would have to offer on the menu. Baked Taku Trout, fricassee of chicken with dumplings and boiled York ham frequently appeared on the menu. Desserts of pies, assorted cakes and fruit puddings were prepared by the baker. All of these foods were cooked or baked using the coal burning stove which you can see in here. The prepared food was then delivered

to the Pantryman in the pantry on the Saloon Deck next to the Dining Room by using a dumbwaiter. The messman was responsible for peeling the vegetables to be served each meal which was no small task once the **Tutshi** started carrying 110 passengers in 1922. He also helped the dishwasher with cleaning the pots and pans. The Galley Crew worked long hours, often from 5 in the morning until late in the evening. Food needing refrigeration was kept as in the ice box next to the galley. In the spring ice was cut from the lakes surrounding Carcross and kept in an ice house packed in saw dust. (Move to the open area immediately aft of the boiler).

As I mentioned earlier this is the freight deck on which was placed all goods being delivered at the stops along the route. This might comprise food stuffs, building materials, or mining equipment. Fire wood for the boiler was stored on the deck close to the boiler. The Deckhands were responsible for moving the freight on and off the ship under the supervision of the 1st and 2nd Mate. The freight was loaded in an attempt to keep the ship trim and running on an even keel.

On the starboard side of the deck you can see 5 cabins that were added in 1922 for use by some of the officers to make room for more passengers on the upper decks.

The heart of the ship is the boiler. It is in here around the fire tubes where the water is converted into steam. The heat and gases from the firebox passes through the fire tubes and boils the water creating the steam. The steam was conducted along an insulated pipe to the Engine Room to the engines. When

the boiler was first installed it only burned wood. On an average trip to Taku and back the **Tutshi** burned 750 cords of wood. The loading of the fire wood most often occurred at night which would disturb and wake the passengers. So in 1925 the boiler system was converted to burn oil and would only burn wood while standing by waiting to depart. The cost of running the **Tutshi** on oil was more costly than burning wood but the **Tutshi** was billed as a luxury cruise and therefore the disturbance created by loading wood at night was not acceptable. Oil tanks were put on board to hold a heavy oil that was brought inland by train from Skagway.

On the bow of the Freight Deck is a steam operated winch and bitt. The winch is used for securing the cables when pushing a barge. An increased freight load could be accommodated with the use of a barge. A line from each aft corner of the barge is secured to a spool on either side of the winch. The barge pivots on the punching post on the end of the bow. To steer the barge to the port side, for example, the Master would command the crew to tighten the line on the port side and slack the line on the starboard side. To the wooden bitt was secured a line by which the **Tutshi** was tied to shore.

At this time we will be going up the passageway on the port side to the Saloon Deck and entering the Observation Room.

It was here in the Observation Room that the passengers spent much of their time talking about their travels, swapping stories and generally relaxing and enjoying the magnificent scenery. This room would have been furnished with fine wicker

chairs facing the windows and behind them bentwood chairs and small round tables upon which to play cards, write postcards or sip on a beverage. This was a perfect hideout if the mosquitoes were particularly bad out on the decks. In 1949 the Observation Room was enlarged to provide a more spacious lounge area for the passengers. Note the tracings on the floor.

On the starboard side of the room is the Purser's office. The Purser on the **Tutshi** was responsible for all freight consignments. There was much paperwork that needed to be handled so that freight was delivered where it was destined. From the paperwork, the Purser made up a list of stops for the trip and delivered a copy to the Wheelhouse and to the Engine Room. The Master needed to know where he was to stop and the Engineers found it helpful to have some advance warning. The Purser dealt directly with passengers. As he collected tickets, he would assign the passengers to a stateroom and notify them which sitting they would be served their meals. The purser dealt with any and all problems that might confront a passenger on the trip. The Purser also sorted mail that was to be delivered along the way and as mail was collected he sorted it for delivery to Carcross. In his office, the Purser had a safe in which to keep any valuables the passengers may have been carrying. It was a rule of the BYN Co. that firearms could not be kept in the staterooms, so they would be kept in the Purser's office. The Purser would also sell playing cards and post cards to the passengers.

Now if you will follow me, we will go into the Dining Room.

(Stand forward of first king post.) The Dining Room was painted the colours much as you see it now. On the forward bulkhead of this room was an electric fireplace with a mantel piece and over it a medieval scene inlaid with wood. It has been reported to have been an incredibly beautiful scene, very appropriate for the furnishings of this vessel. This Dining Room could sit nearly 60 people at any one time so when she was running full, meals were served in two sittings. The food which was prepared in the galley on the freight deck was delivered by dumbwaiter to the pantry. The Pantryman would then distribute the food to the waiters who were serving the passengers. The Pantryman would also prepare salads, shrimp cocktails and mayonnaise. Tips could be made by the waiters if they gave special attentive service. The food on the **Tutshi** had the reputation of being extremely good. Baked Taku Trout, fricassee of chicken with dumplings and boiled York ham frequently appeared on the menu. Desserts of pies, assorted cakes and fruit puddings were prepared by the baker.

The crew members who waited on the tables during meal time were also the crew members who cleaned and made the beds in the staterooms between breakfast and lunch.

After the evening meal the tables would be covered with a heavy green table cloth so they could be used for recreation by the passengers, usually for card games.

The Officers ate their meals in the Dining Room with the passengers. In the presence of the passengers the Officers would be obliged to wear their uniforms.

Our research indicates that there was usually a party atmosphere amongst the passengers on the **Tutshi**. Travelling on a boat of such opulence and being surrounded by such natural beauty couldn't help but put people in a festive mood. People were on vacation and were being well taken care of by the crew of the **Tutshi**.

The **Tutshi** was kept very busy throughout the summer season or as long as the weather was warm. During the 1920's and 1930's the **Tutshi** was carrying an average of 5200 passengers a year. The busiest year was 1929 when she carried over 9,000 passengers on 93 round trips. The excursions from Carcross started for the passengers in Skagway. Most of the passengers on the Tutshi were tourists who were part of a cruise package that was on its way to Alaska. The cruise ship would wait in Skagway for 36 hours while its passengers went to Atlin or Ben-My-Chree. These passengers would board the White Pass train to Carcross where the **Tutshi** was standing by ready to take them out on the southern lakes. The trip through Nares and Tagish lakes to Taku Landing at the east end of Taku Inlet lasted approximately 5 1/2 hours. At Taku everyone and everything had to be transferred by train on 2 1/2 mile narrow gauge rail line, known as the Taku Tramway, to Scotia Bay on the west shore of Atlin Lake. Here the passengers and freight were taken by the gas-powered Tarahne across Atlin Lake to Atlin, a crossing of six miles. The tourists stayed in the grand three storey Atlin Inn that White Pass had built in 1916 to accommodate the growing number of tourists heading for Atlin. There was much to do

there. From the Inn there was a fabulous view of the Llewellyn Glacier at the south end of Atlin Lake. The fishing and hunting in the area was superb. A golf course had been built nearby for those interested in the sport. There were many trails for simply hiking and enjoying the sheer sense of the wilderness. Some people only stayed a few days while others from more distant places stayed weeks and even months.

Another destination in the area was Ben-My-Chree at the south end of West Taku Arm. The site of Ben-My-Chree dates back to 1910 when a hopeful prospector built this garden paradise as base camp for his work. Otto Partridge and his wife Kate were able to grow a fantastic garden that reminded them of their home in England. While the Gleaner, the fore runner of the **Tutshi**, was making its usual mail stop at Ben-My-Chree, the tourists would insist on getting off and quickly visit with the Partridges and admire their fabulous gardens. It became obvious that Ben-My-Chree held much attraction for tourists. In 1917, the BYN Co. ran two special excursions to Ben-My-Chree in the newly launched **Tutshi**. Each summer thereafter, BYN Co. added more excursions to meet the growing demand so that by 1925 the superintendent of BYN Co. commented that the trip to West Taku Arm and Ben-My-Chree was the most popular destination stop in the area. The following year the **Tutshi** alternated daily trips to Ben-My-Chree and to Taku.

In 1936 the BYN Co. stopped running tours to the Atlin Inn and made Ben-My-Chree the primary destination for their tourist trade. The **Tutshi** would leave from Carcross at noon, travel to

Tagish Lake, south on West Taku Arm to Ben-My-Chree, arriving around seven in the evening. The passengers would disembark for two hours at which time they would once again board the **Tutshi**. If the passengers were particularly energetic that evening, the **Tutshi** would tie up at Engineer Mine for a few hours while a dance was held. Early in the morning, usually around two, the **Tutshi** would start heading back to Carcross, arriving around 9 a.m. where the passengers would board the train for Skagway. This excursion would cost the passenger $15.00 for the round trip.

That is the end of our tour today. I'd like to thank-you for your keen interest in stopping for a tour of the **Tutshi**. You've been an excellent group. Do have a great time on the rest of your visit to the Yukon. If you have any more questions I'll be glad to answer them once we return to the Visitor Reception Centre after we leave the ship.

The easiest route for getting off the ship is to go out through this passageway, turn to your left and use the stairs going down to the freight deck. Again, turn left and walk past the boiler until you see the open freight door on your left leading to the gangway, which will take you back to the Visitor Reception Centre. Thanks again and have a good day.

APPENDIX A

Suggested Reading List

Journey. Skagway - Whitehorse - A travellers' guide to the land and its people. By Sue Ellenton and the Yukon Conservation Society. 1982.

Klondike. Pierre Berton. 1972.

Klondike Quest. Pierre Berton. 1985.

Yukon Transportation: a history. Gordon Bennett. 1978.

The above list of titles can be purchased in any of the bookstores in Whitehorse.

APPENDIX B

S.S. Tutshi Specifications

Launched:	Carcross, Yukon June 12, 1917
Owner:	British Yukon Navigation Co. Ltd.
Port of Registry:	Vancouver, B.C.
Build:	Carvel Built, square stern, wood framework
Length:	59.9 metres (167 feet)
Beam:	10.7 metres (35 feet)
Depth of Hold:	1.8 metres (6 feet)
Gross Tonnage:	1040.51 tons (936.46 tonnes)
Registered Tonnage:	746.31 tons (671.68 tonnes)
Crew:	28 in 1955
Passengers:	80 in 1917 120 in 1955
Speed:	13 - 17 knots (23.92 - 31.28 km/hr)
Nominal Horsepower:	46.9
Indicated Horsepower:	450
Steam Pressure:	165 - 170 lbs. per sq. in.
Retired:	1955
Engines:	Tandem Compound (from Seattle #3 - installed in Tutshi 1927) Cylinder Diameter H.P. 14" - L.P. 22" Stroke 72"
Wheel:	Length of Buckets 16' 8" - 5.08 metres Number of Buckets 18 Diameter 21' 9" - 6.63 metres
Boiler:	Locomotive Firebox from the Tyrrell

APPENDIX C

DEFINITIONS OF NAUTICAL TERMINOLOGY

abaft	toward the stern of a ship; back; behind; back of
aboard	on or in a ship
alongside	by the side of (ex. alongside a dock
amidships	in the vicinity of the middle portion of a vessel as distinguished from her ends
astern	signifying position, in the rear of or abaft the stern; as regards motion, the opposite of going ahead; backwards
back pressure	residual pressure on the exhaust side of a steam-engine piston against which the steam on the intake side must work
barge	a craft of full body and heavy construction designed for the carriage of cargo but having no machinery for self-propulsion
beam	the extreme width of a ship; a longitudinal member of the ship's structure supporting the deck
berth	a) a place where a ship lies when at anchor or at a wharf b) a sleeping accommodation that consists typically of a shelf or frame fixed to a wall and is provided with a mattress and bedding
bilges	the lowest portion of a ship inside the hull, considering the inner bottom where fitted as the bottom hull limit
bitts	a term applied to short metal or wood columns extending up from a base plate secured to a deck or bulwark rail or placed on a pier and to timbers extended up through and a short distance above a deck for the purpose of securing and belaying ropes, hawsers, cables,etc., also called bollards
boarding	the act of going on board a ship
boiler	the part of a steam generator in which water is converted into steam and which consists usually

	of metal shills, headers, and tubes that form the container for steam and water under pressure
boiler scale	scale, chiefly calcium sulphate, formed on the walls and tubes of a steam boiler. If excessive, it leads to overheating of the metal and ultimate failure
bow	the forward end of the ship
bulkhead	a term applied to any one of the partition walls which sub-divides the interior of a ship into compartments or rooms
cabin	the interior of a deck house, usually the space set aside for the use of officers and passengers
capstan	a vertical drum or barrel operated by a steam engine and used for handling heavy anchor chains, heavy hawsers, etc. The engine is usually nonreversing and transmits its power to the capstan shaft through a worm wheel. The drum is fitted with pawls to prevent overhauling under the strain of the hawser or chain when the power is shut off. The engine may be disconnected and the capstan operated by hand through the medium of capstan bars
carvel	the method of side and bottom planking in which planks are laid edge to edge in a fore and aft direction producing smooth surface
caulking	the insertion of oakum into the seams and the butts of planking using iron tools and a mallet, to render the seams watertight
chart	a marine map showing water depth, channels, buoys, obstructions, land areas, etc.
cleats	pieces of wood or metal, of various shapes according to their uses, usually having two projecting arms upon which to belay ropes
clinometer	an instrument used for indicating the angle of roll or pitch of a vessel
companionway	a hatchway or opening in a deck provided with a set of steps or ladders leading from one deck level to another for the use of personnel

cord	usually a unit of wood equal to a stack 4'x4'x8' or 128 cubic feet
cotter, key	a solid key or wedge used to secure a wheel on a shaft
cribbing	foundations of heavy blocks and timbers for supporting a vessel during the period of construction
davit	a device used to lower and raise ship's boats and sometimes for other purposes
deck	a deck in a ship corresponds to a floor in a building, it is the plating, planking, or covering of any tier of beams above the inner bottom forming a floor, either in the hull or superstructure of a ship. Decks are designated by their locations as upper deck, main deck, etc., and forward lower deck, after superstructure deck, etc. The after portion of a weather deck was formerly known as the quarter deck and on warships is allotted to the use of officers
draught	the depth of the vessel below the waterline measured vertically to the lowest part of the hull, propellers or other reference point
draught marks	the numbers which are placed on each side of a vessel near the bow and stern, and often also amidships, to indicate the distance from the number to the bottom of the keel or a fixed reference point. These numbers are six inches high, are spaced twelve inches bottom to bottom vertically, and are located as close to the bow and stern as possible
economizer	an apparatus for utilizing heat otherwise wasted; specifically a bank of tubes, placed across a boiler flue, through which the feed water is pumped, being heated by the otherwise wasted heat of the flue gases
even keel	when a boat rides on an even keel, its plane of floatation is either coincident with or parallel to the designed waterline
fender	the term applied to various devices fastened to or hung over the sides of a vessel to prevent rubbing or chafing against other vessels or piers. Wood spars, bundles of rope, woven cane or rope-covered cork are

	hung over the sides by lines when permanent fenders are not fitted
firebox	a chamber as of a steam boiler that contains a fire; that part of a locomotive-type boiler containing the fire; the grate is at the bottom, the walls and top being surrounded by water
flagstaff	flag pole, usually at the stern of a ship; carries the ensign
galley	the space on a vessel in which the food is prepared and cooked
hawser	a large rope or a cable used in warping, towing and mooring
hog frame	a fore-and-aft frame, forming a truss for the main frames of a vessel to prevent bending
hogging	a ship is said to hog when part of the keel and bottom are strained and arch upwards. The term is opposed to sagging which means to curve downwards
jackstaff	flagpole at the bow of a ship
keel	the main longitudinal structural member extending from stem to stern along the centre of the bottom of a boat
keelson	an internal, longitudinal member extending along the centreline over the keel
king post	a strong vertical post attached to the keel used to support the hog chains
knot	a unit of speed,equalling one nautical mile (6,080.2 feet) an hour
lagging	a term applied to the insulating material that is fitted on the outside of boilers, piping, etc.
launching	a term applied to the operation of transferring a vessel from the building ways into the water. End launching and side launching methods are employed; the former method is used when the vessel is built at an angle, usually at right angles, to the water front and the vessel is launched stern first, while in side launching the vessel is built parallel to the waterfront and launched

sidewise. In preparing for an end launching, usually groundways, made of heavy timbers are laid with an inclination of about 1/2" to 5/8" to the foot parallel tot he centre line of the ship one on either side of the keel, and spaced about one-third of the beam of the vessel apart. These groundways run the length of the vessel and for some distance out under the water. On top of the groundways are placed the sliding ways, also heavy timbers, and between these two ways is placed a coating of launching grease. The sliding ways are prevented from sliding on the greased groundways by a trigger or similar device and dog or dagger shores. Cradles are built up to fit the form of the vessel, and between the sliding ways and the cradle, wedges are driven and the weight of the ship thus transferred from the building blocks to the sliding ways. After the building blocks and shores are removed, the trigger is released and gravity causes the vessel to slide down the inclined ways. In some case hydraulic jacks are set at the upper end of the groundways to exert pressure on the sliding ways to assist in overcoming initial friction along the ways. A similar procedure is followed in the case of side launchings, except that more than two groundways are usually used, depending on the length of the ship, and the inclination of the ways is steeper.

list — the deviation of a vessel from the upright position, due to bilging, shifting of cargo or other cause

logbook — a daily record of the distance sailed, the course and the weather

mooring — a term applied to the operation of anchoring a vessel in a harbour, securing her to a mooring buoy, or to a wharf or dock by means of chains or ropes.

navigation — the art of directing a boat and fixing her position by using landmarks or navigational aids (buoys, charts, compass, etc.)

oakum — old rope picked to pieces, soaked in Stockholm tar, and then used to caulk seams.

pitman — a rigid rod or arm (connecting rod) that transmits power from one reciprocating motion of

	a machine to one rotating part; in the case of the paddlewheel the power is transmitted from the reciprocating pistons of the steam engines to the rotating crank of the paddlewheel
port	the left side of a boat when facing forward; a harbour.
purchase power	any mechanical advantage which increases the applied, in this case an example would be when the paddle wheel dips far enough into the water for it to have surface to push against.
rake	a term applied to the fore and aft inclination from the vertical of a mast, smokestack, etc.
ribs	a term applied to the transverse frames of a boat.
ropes	all cordage in general above 1 inch in circumference.
rudder	attached and hinged to the stern; and is the instrument by which the ship is steered.
sagging	the deformation or yielding caused when the middle portion of a structure or ship settles or sinks below its designed or accustomed position. The reverse of hogging.
smokestack	a metal chimney or passage through which the smoke and gases are led from the uptakes to the open air.
soft patch	a temporary plate put on over a break or hole and secured with tap bolts. It is made watertight with a gasket such as canvas saturated in red lead.
stanchions	short columns or supports for decks, hand rails, etc. Stanchions are made of pipe, steel shapes, rods, or wood according to the location and purpose they serve.
starboard	the right-hand side of the ship when looking from aft to forward. Opposite of port.
stateroom	a private room of cabin for the accommodation of passengers or officers.
stern	the after end of a vessel; the farthest distance from the bow.

superstructure	a structure built above the uppermost complete deck; freight house, a pilot house, bridge, galley house, etc.
telegraph	an apparatus, either electrical or mechanical, for transmitting orders, as from a ship's wheelhouse to the engine room.
trim	to make a vessel ride on an even keel by shifting cargo.
underway	a boat moving through the water in any direction.
valve	a mechanical device used for controlling or shutting off the passage of a fluid or gas into or out of a container or through a pipe line.
voice tube	a tube designed for the carriage of the human voice from one part of the ship to another. In its simplest form the voice tube system includes a speaking connection between the wheelhouse and engine room.
ways	long slanting beams, leading from shore to the waters edge, from which a ship can be launched or on to which it can be hauled out.
windlass	an apparatus in which horizontal or vertical drums are operated by means of a steam engine or motor for the purpose of handling heavy anchor chain, hawsers,etc.

APPENDIX D

CRITIQUE OF INTERPRETIVE TOUR

Name: _____ Date: _____

Pre-Tour

Greeting Visitors: _____

Uniform/Appearance: _____

Tour

Introduction: _____

Volume: _____

Rate: _____

Articulation: _____

Tone: _____

Grammar: _____

Enthusiasm: _____

Attitude: _____

Mannerisms: _____

Eye Contact: _____

Clarity: _____

Accuracy: _____

_____

Audience Participation: _____

Conclusions: _____

Conciseness: _____

Summary

Strong Points: _____

_____

_____

Areas Needing Improvement:_____

_____

_____